830 and 835 Rotary Mower-Conditioners

(Serial No. 361801 -)

JOHN DEERE

OPERATOR'S MANUAL

830 and 835 Mower-Conditioners

OMFH311967 ISSUE L0 (ENGLISH)

John Deere Ottumwa Works

Export Edition

PRINTED IN U.S.A.

Introduction

Foreword

E58198—UN—12NOV09

830 Mower-Conditioner

READ THIS MANUAL carefully to learn how to operate and service your machine correctly. Failure to do so could result in personal injury or equipment damage. This manual and safety signs on your machine may also be available in other languages (see your John Deere dealer to order).

THIS MANUAL SHOULD BE CONSIDERED a permanent part of your machine and should remain with the machine when you sell it.

MEASUREMENTS in this manual are given in both metric and customary U.S. unit equivalents. Use only correct replacement parts and fasteners. Metric and inch fasteners may require a specific metric or inch wrench.

RIGHT-HAND AND LEFT-HAND sides are determined by facing the direction the implement will travel when going forward.

WRITE PRODUCT IDENTIFICATION NUMBERS (P.I.N.) in the Specification or Identification Numbers section. Accurately record all the numbers to help in tracing the machine should it be stolen. Your dealer also needs these numbers when you order parts. File the identification numbers in a secure place off the machine.

BEFORE DELIVERING THIS MACHINE, ensure your dealer performed a predelivery inspection.

THIS MACHINE IS DESIGNED SOLELY for use in customary agricultural or similar operations ("INTENDED USE"). Use in any other way is considered as contrary to the intended use. The manufacturer accepts no liability for damage or injury resulting from this misuse, and these risks must be borne solely by the user. Compliance with and strict adherence to the conditions of operation, service and repair as specified by the manufacturer also constitute essential elements for the intended use.

THIS MACHINE SHOULD BE OPERATED, serviced and repaired only by persons familiar with all its particular characteristics and acquainted with the relevant safety rules (accident prevention). The accident prevention regulations, all other generally recognized regulations on safety and occupational medicine and the road traffic regulations must be observed at all times. Any arbitrary modifications carried out on this machine will relieve the manufacturer of all liability for any resulting damage or injury.

If you are not the original owner of this machine, it is in your interest to contact your local John Deere dealer to inform them of this unit's serial number. This will help John Deere notify you of any issues or product improvements.

PP98408,0000354-19-12NOV09

Contents

Continued on next page

Original Instructions. All information, illustrations and specifications in this manual are based on the latest information available at the time of publication. The right is reserved to make changes at any time without notice.

Identification View

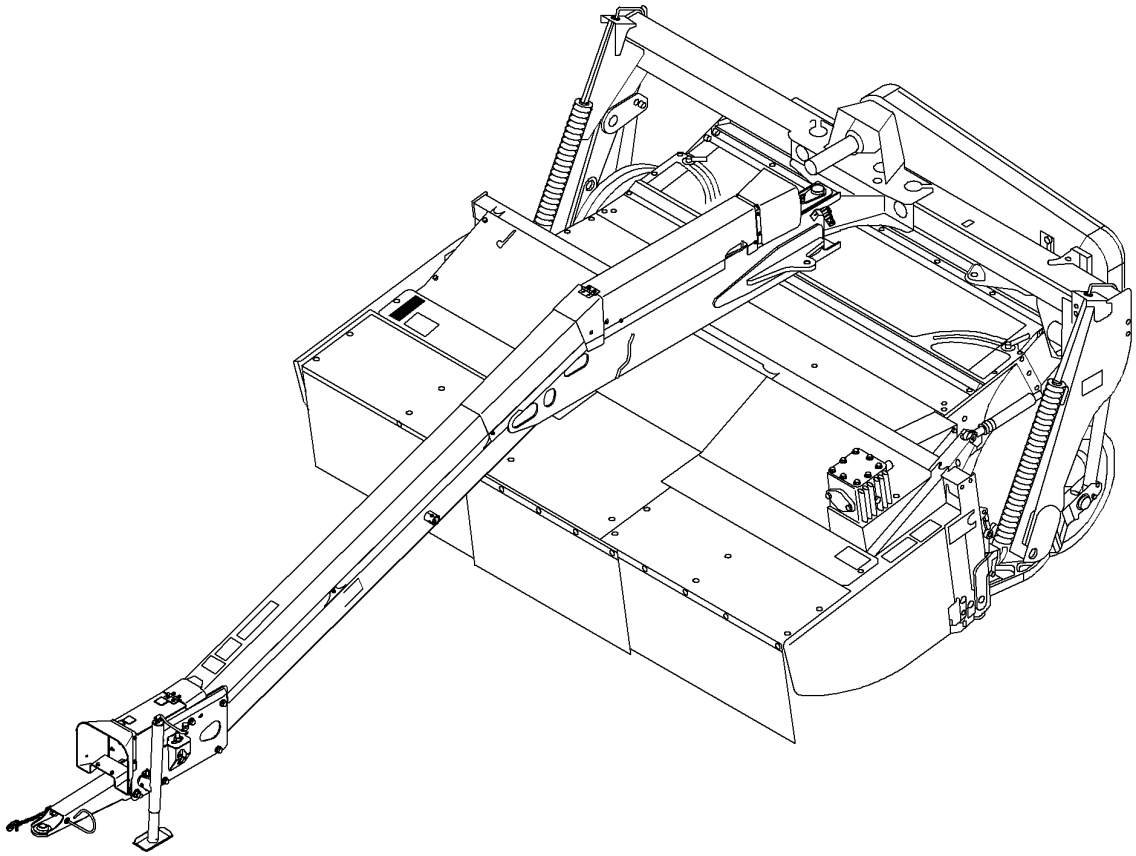

E55090—UN—04MAY07
OUO6085,000052E-19-17MAY07

Recognize Safety Information

T81389—UN—28JUN13

This is a safety-alert symbol. When you see this symbol on your machine or in this manual, be alert to the potential for personal injury.

Follow recommended precautions and safe operating practices.

DX,ALERT-19-29SEP98

Understand Signal Words

⚠ DANGER

⚠ WARNING

⚠ CAUTION

TS187—19—30SEP88

DANGER; The signal word DANGER indicates a hazardous situation which, if not avoided, will result in death or serious injury.

WARNING; The signal word WARNING indicates a hazardous situation which, if not avoided, could result in death or serious injury.

CAUTION; The signal word CAUTION indicates a hazardous situation which, if not avoided, could result in minor or moderate injury. CAUTION may also be used to alert against unsafe practices associated with events which could lead to personal injury.

A signal word—DANGER, WARNING, or CAUTION—is used with the safety-alert symbol. DANGER identifies the most serious hazards. DANGER or WARNING safety signs are located near specific hazards. General precautions are listed on CAUTION safety signs. CAUTION also calls attention to safety messages in this manual.

DX,SIGNAL-19-05OCT16

Follow Safety Instructions

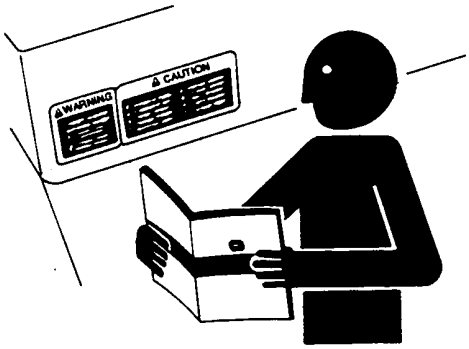

TS201—UN—15APR13

Carefully read all safety messages in this manual and on your machine safety signs. Keep safety signs in good condition. Replace missing or damaged safety signs. Be sure new equipment components and repair parts include the current safety signs. Replacement safety signs are available from your John Deere dealer.

There can be additional safety information contained on parts and components sourced from suppliers that is not reproduced in this operator's manual.

Learn how to operate the machine and how to use controls properly. Do not let anyone operate without instruction.

Keep your machine in proper working condition. Unauthorized modifications to the machine may impair the function and/or safety and affect machine life.

If you do not understand any part of this manual and need assistance, contact your John Deere dealer.

DX,READ-19-16JUN09

Spanish Safety Signs and Operator's Manual

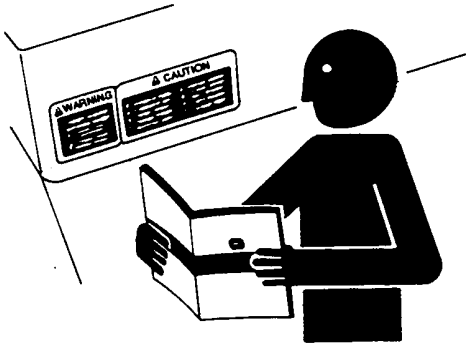

TS201—UN—15APR13

Spanish versions of the operator's manual and safety signs are available for this machine through authorized John Deere dealers. See your John Deere dealer.

OUO6085,00008DC-19-30MAY08

Maintain a Safety Area Around the Machine

Machine movements and parts in motion can cause serious injury.

Do not, under any circumstances, attach, detach or operate the machine with other people, pets or animals in the vicinity.

OUCC006,00002D1-19-13DEC00

Operate Safely

TS268—UN—23AUG88

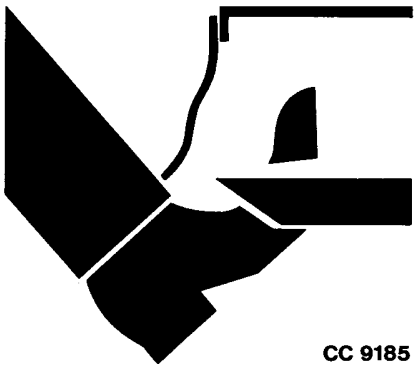

CC9185—UN—07FEB95

1. Keep all curtains and shields in place.
2. Never hand feed material into the machine.
3. Do not lean against or sit or stand on the cutterbar curtains or their supporting framework.
4. Do not operate mower-conditioner with cutterbar in raised position.
5. Regularly check that disk and knife bolts are tight; also verify that tines are securely mounted on rotor.
6. Always operate the machine at rated speed.
7. Drive slowly over rough ground.
8. Avoid holes when operating on hillsides. Tractor rollover could result. It is requested that the mower-conditioner be used only with tractors having an operator enclosure.
9. Provide sufficient weight to stabilize the tractor when operating on hilly land or under other adverse conditions. See your tractor operator's manual.
10. Lower mower-conditioner to the ground when leaving it and tractor unattended.
11. Always apply parking brake before detaching from tractor.

CC,224SM 004146-19-01JAN98

Keep Riders Off Machine

TS249—UN—23AUG88

Keep riders off.

Riders are subject to injury such as being struck by foreign objects and being thrown off of the machine. Riders also obstruct the operator's view resulting in the machine being operated in an unsafe manner.

CC03745,0000471-19-23JAN03

Towing the Machine on Public Roads

H28930—UN—30JUN89

Always observe local road traffic regulations when using public roads.

Be sure reflectors and warning lights are clean and visible.

Move the mower-conditioner tongue to transport position.

Engage tongue swing lock by pulling back on handle.

OUO6085,000024A-19-06OCT04

Tow Loads Safely

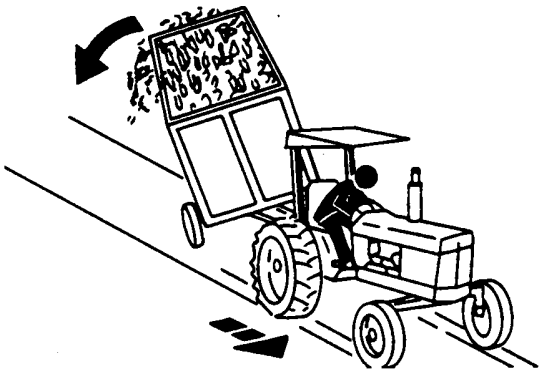

TS216—UN—23AUG88

Stopping distance increases with speed and weight of towed loads, and on slopes. Towed loads with or without brakes that are too heavy for the tractor or are towed too fast can cause loss of control. Consider the total weight of the equipment and its load.

Observe these recommended maximum road speeds, or local speed limits which may be lower:

- If towed equipment does not have brakes, do not travel more than 32 km/h (20 mph) and do not tow loads more than 1.5 times the tractor weight.
- If towed equipment has brakes, do not travel more than 40 km/h (25 mph) and do not tow loads more than 4.5 times the tractor weight.

Ensure the load does not exceed the recommended weight ratio. Add ballast to recommended maximum for tractor, lighten the load, or get a heavier towing unit. The tractor must be heavy and powerful enough with adequate braking power for the towed load. Use additional caution when towing loads under adverse surface conditions, when turning, and on inclines.

DX,TOW-19-02OCT95

Prepare for Emergencies

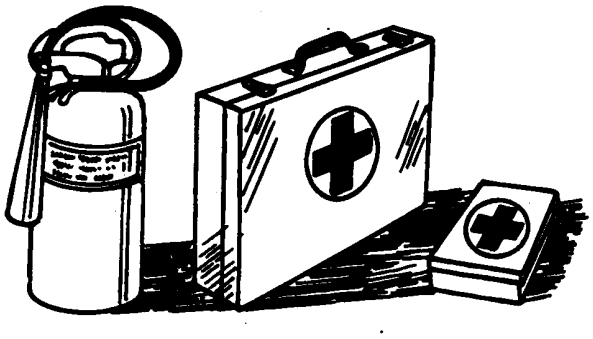

TS291—UN—15APR13

Be prepared if a fire starts.

Keep a first aid kit and fire extinguisher handy.

Keep emergency numbers for doctors, ambulance service, hospital, and fire department near your telephone.

DX,FIRE2-19-03MAR93

Fire Prevention

TS227—UN—15APR13

To reduce the risk of fire, follow these guidelines, especially in dry crop conditions:

- Equip the machine with a water-type fire extinguisher. Large capacity water fire extinguishers are recommended because application of water can cool hot parts to prevent a fire.
- Keep foreign material (crop, chaff material, etc.) from building up on the machine near potentially hot areas, such as bearings. Remove this buildup as part of the regular service operations.
- Avoid high pressure power-washing adjacent to the bearings to prevent damaging seals.
- Check bearings regularly for early signs of failure.
- Replace bearings as necessary.
- If noticeable changes in machine performance occur which might indicate a part is beginning to fail, stop cutting/conditioning immediately and investigate the cause of any sounds, smells, or sights which are unusual.

- Use extreme care if it is necessary to park a machine in a field of dry crop or stubble. Whenever possible, park machine on bare ground or in an area surrounded by bare ground. Before leaving a machine which has been operating, verify there are no areas which are hot enough to start a fire.
- If service operations require using a welder, cutting torch or grinder on the machine, refer to FIRE PREVENTION in Service section for guidelines which may prove useful in preventing a fire.
- Use extreme care when smoking around the machine.

OUCC006,0000A3F-19-20JUN12

In Case of Fire

TS227—UN—15APR13

Stop working immediately at the first sign of trouble. This may be a scorched smell, an unusual sound, or the sight of smoke or flame.

Do not risk personal injury. If a fire is too far advanced, do not try to extinguish it.

If you can safely extinguish the fire, proceed carefully and follow these guidelines:

- Position the tractor upwind from the machine to avoid the fire from overtaking the tractor.
- Drive away from any crop material.
- Use a fire extinguisher or other source to spray water at the base of the flame, and to cool adjacent parts.

AG,OUO6039,784-19-27JUN00

Wear Protective Clothing

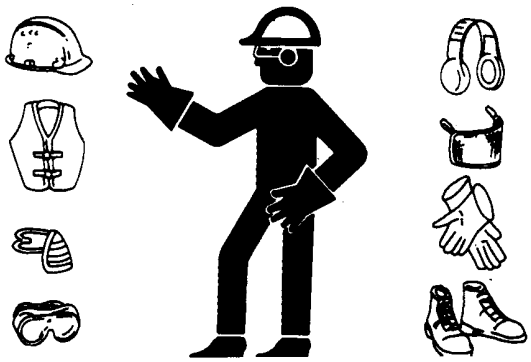

TS206—UN—15APR13

Wear close fitting clothing and safety equipment appropriate to the job.

Prolonged exposure to loud noise can cause impairment or loss of hearing.

Wear a suitable hearing protective device such as earmuffs or earplugs to protect against objectionable or uncomfortable loud noises.

Operating equipment safely requires the full attention of the operator. Do not wear radio or music headphones while operating machine.

DX,WEAR-19-10SEP90

Protect Against Noise

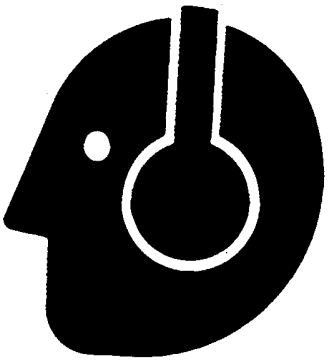

TS207—UN—23AUG88

There are many variables that affect the sound level range, including machine configuration, condition and maintenance level of the machine, ground surface, operating environmental, duty cycles, ambient noise, and attachments.

Exposure to loud noise can cause impairment or loss of hearing.

Always wear hearing protection. Wear a suitable hearing protective device such as earmuffs or earplugs to protect against objectionable or uncomfortable loud noises.

DX,NOISE-19-03OCT17

Handle Chemical Products Safely

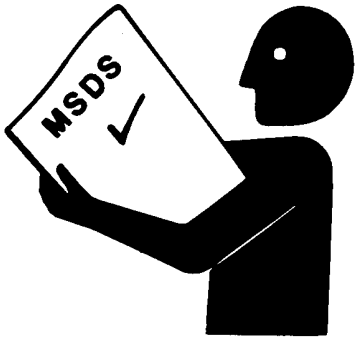

TS1132—UN—15APR13

Direct exposure to hazardous chemicals can cause serious injury. Potentially hazardous chemicals used with John Deere equipment include such items as lubricants, coolants, paints, and adhesives.

A Material Safety Data Sheet (MSDS) provides specific details on chemical products: physical and health hazards, safety procedures, and emergency response techniques.

Check the MSDS before you start any job using a hazardous chemical. That way you will know exactly what the risks are and how to do the job safely. Then follow procedures and recommended equipment.

(See your John Deere dealer for MSDS's on chemical products used with John Deere equipment.)

DX,MSDS,NA-19-03MAR93

Service Machines Safely

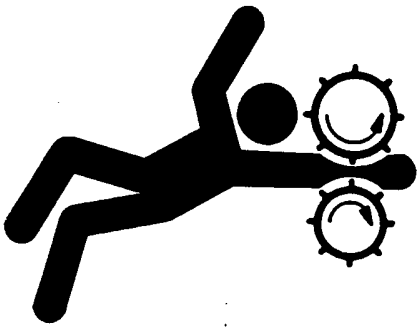

TS228—UN—23AUG88

Tie long hair behind your head. Do not wear a necktie, scarf, loose clothing, or necklace when you work near machine tools or moving parts. If these items were to get caught, severe injury could result.

Remove rings and other jewelry to prevent electrical shorts and entanglement in moving parts.

DX,LOOSE-19-04JUN90

Check Machine Safety

Always check the road and general operating safety of the machine before using.

FX,READY-19-28FEB91

Stay Clear of Rotating Drivelines

TS1644—UN—22AUG95

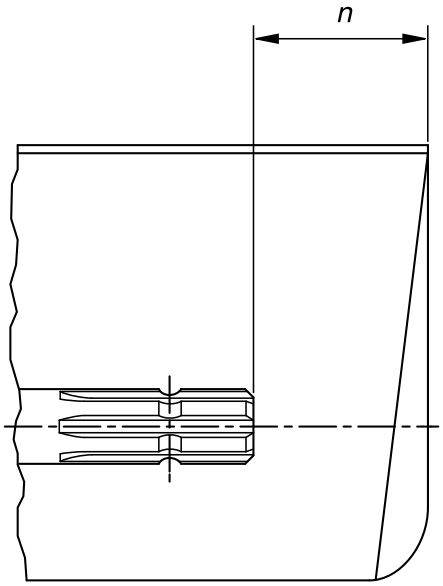

H96219—UN—29APR10

Entanglement in rotating driveline can cause serious injury or death.

Keep tractor master shield and driveline shields in place at all times. Make sure rotating shields turn freely.

Only use power take-off driveshafts with adequate guards and shields.

Wear close fitting clothing. Stop the engine and be sure that PTO driveline is stopped before making adjustments, connections, or cleaning out PTO driven equipment.

Do not install any adapter device between the tractor and the primary implement PTO driveshaft that will allow a 1000 rpm tractor shaft to power a 540 rpm implement at speeds higher than 540 rpm.

Do not install any adapter device that results in a portion of the rotating implement shaft, tractor shaft, or the adapter to be unguarded. The tractor master shield shall overlap the end of the splined shaft and the added adaptor device as outlined in the table.

The angle at which the primary implement PTO driveshaft can be inclined may be reduced depending on the shape and size of the tractor master shield and the shape and size of the guard of the primary implement PTO driveshaft.

Do not raise implements high enough to damage the tractor master shield or guard of primary implement PTO driveshaft. Detach the PTO driveline shaft if it is necessary to increase implement height. (See Attching/ Detaching PTO Driveline)

When using Type 3/4 PTO, inclination and turning angles may be reduced depending on type of PTO master shield and coupling rails.

PTO Type	Diameter	Splines	n ± 5 mm (0.20 in.)
1	35 mm (1.378 in.)	6	85 mm (3.35 in.)
2	35 mm (1.378 in.)	21	85 mm (3.35 in.)
3	45 mm (1.772 in.)	20	100 mm (4.00 in.)
4	57.5 mm (2.264 in.)	22	100 mm (4.00 in.)

DX,PTO-19-28FEB17

Avoid Injury from Thrown Objects

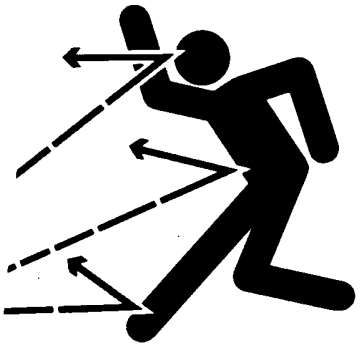

TS265—UN—23AUG88

Extreme care must be exercised to avoid injury from thrown objects. Do not, under any circumstances, operate the mower-conditioner when other people are in the vicinity. Stones and other objects can be thrown great distances by the rotating cutting blades.

The cutterbar curtains are very important to reduce the potential for thrown objects. Always keep these curtains down when operating the mower-conditioner. Replace the curtains if they should become worn or damaged.

For additional operator protection from thrown objects, it is required that this mower-conditioner be used with a tractor equipped with a complete operator enclosure.

CC03745,0000379-19-15MAR02

Use Safety Lights and Devices

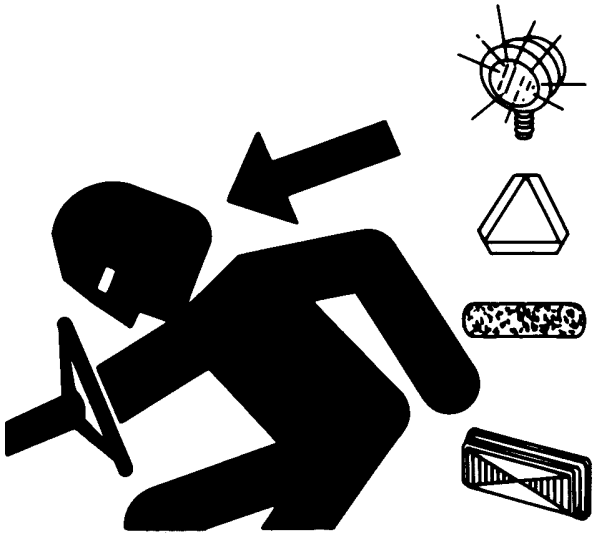

TS951—UN—12APR90

Prevent collisions between other road users, slow moving tractors with attachments or towed equipment, and self-propelled machines on public roads. Frequently check for traffic from the rear, especially in turns, and use hand signals or turn signal lights.

Use headlights, flashing warning lights, and turn signals day and night. Follow local regulations for equipment lighting and marking. Keep lighting and marking visible and in good working order. Replace or repair lighting and marking that has been damaged or lost.

CC03745,0000378-19-15MAR02

Use a Safety Chain

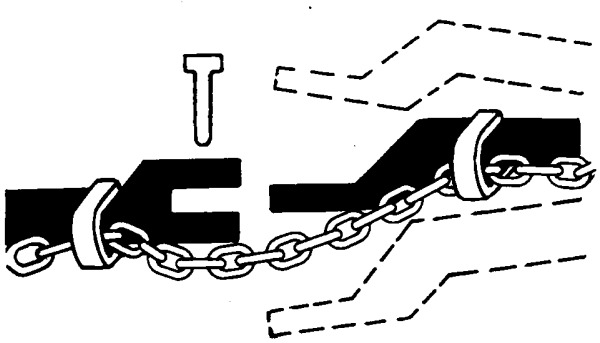

TS217—UN—23AUG88

A safety chain will help control drawn equipment should it accidentally separate from the drawbar.

Using the appropriate adapter parts, attach the chain to the tractor drawbar support or other specified anchor

location. Provide only enough slack in the chain to permit turning.

See your John Deere dealer for a chain with a strength rating equal to or greater than the gross weight of the towed machine. Do not use safety chain for towing.

DX,CHAIN-19-03MAR93

Practice Safe Maintenance

TS218—UN—23AUG88

Understand service procedure before doing work. Keep area clean and dry.

Never lubricate, service, or adjust machine while it is moving. Keep hands, feet, and clothing away from power-driven parts. Disengage all power and operate controls to relieve pressure. Lower equipment to the ground. Stop the engine. Remove the key. Allow machine to cool.

Securely support any machine elements that must be raised for service work.

Keep all parts in good condition and properly installed. Fix damage immediately. Replace worn or broken parts. Remove any buildup of grease, oil, or debris.

On self-propelled equipment, disconnect battery ground cable (-) before making adjustments on electrical systems or welding on machine.

On towed implements, disconnect wiring harnesses from tractor before servicing electrical system components or welding on machine.

Falling while cleaning or working at height can cause serious injury. Use a ladder or platform to easily reach each location. Use sturdy and secure footholds and handholds.

DX,SERV-19-28FEB17

Support Machine Properly

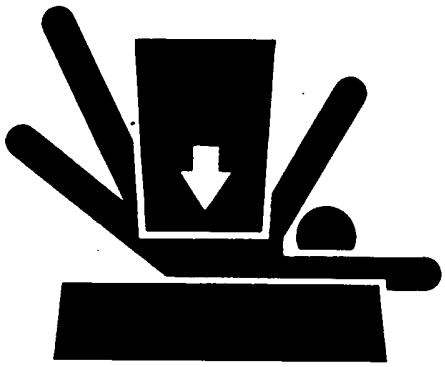

TS229—UN—23AUG88

Always lower the attachment or implement to the ground before you work on the machine. If the work requires that the machine or attachment be lifted, provide secure support for them. If left in a raised position, hydraulically supported devices can settle or leak down.

Do not support the machine on cinder blocks, hollow tiles, or props that may crumble under continuous load. Do not work under a machine that is supported solely by a jack. Follow recommended procedures in this manual.

When implements or attachments are used with a machine, always follow safety precautions listed in the implement or attachment operator's manual.

DX,LOWER-19-24FEB00

Remove Paint Before Welding or Heating

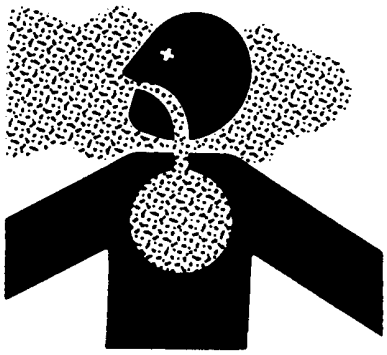

TS220—UN—15APR13

Avoid potentially toxic fumes and dust.

Hazardous fumes can be generated when paint is heated by welding, soldering, or using a torch.

Remove paint before heating:

- Remove paint a minimum of 100 mm (4 in.) from area to be affected by heating. If paint cannot be removed, wear an approved respirator before heating or welding.
- If you sand or grind paint, avoid breathing the dust. Wear an approved respirator.
- If you use solvent or paint stripper, remove stripper with soap and water before welding. Remove solvent or paint stripper containers and other flammable material from area. Allow fumes to disperse at least 15 minutes before welding or heating.

Do not use a chlorinated solvent in areas where welding will take place.

Do all work in an area that is well ventilated to carry toxic fumes and dust away.

Dispose of paint and solvent properly.

DX,PAINT-19-24JUL02

Avoid Heating Near Pressurized Fluid Lines

TS953—UN—15MAY90

Flammable spray can be generated by heating near pressurized fluid lines, resulting in severe burns to yourself and bystanders. Do not heat by welding, soldering, or using a torch near pressurized fluid lines or other flammable materials. Pressurized lines can accidentally burst when heat goes beyond the immediate flame area.

DX,TORCH-19-10DEC04

Avoid High-Pressure Fluids

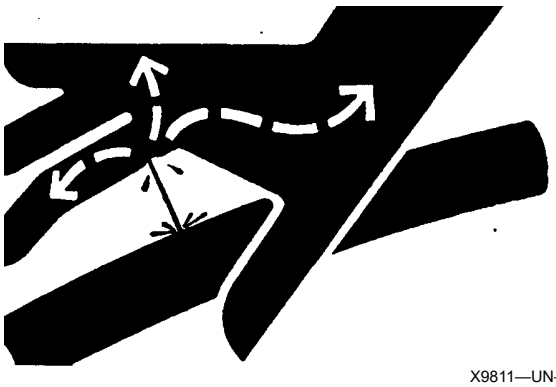

X9811—UN—23AUG88

Inspect hydraulic hoses periodically – at least once per year – for leakage, kinking, cuts, cracks, abrasion, blisters, corrosion, exposed wire braid or any other signs of wear or damage.

Replace worn or damaged hose assemblies immediately with John Deere approved replacement parts.

Escaping fluid under pressure can penetrate the skin causing serious injury.

Avoid the hazard by relieving pressure before disconnecting hydraulic or other lines. Tighten all connections before applying pressure.

Search for leaks with a piece of cardboard. Protect hands and body from high-pressure fluids.

If an accident occurs, see a doctor immediately. Any fluid injected into the skin must be surgically removed within a few hours or gangrene may result. Doctors unfamiliar with this type of injury should reference a knowledgeable medical source. Such information is available in English from Deere & Company Medical Department in Moline, Illinois, U.S.A., by calling 1-800-822-8262 or +1 309-748-5636.

DX,FLUID-19-12OCT11

Avoid High-Pressure Jet on Safety Decals

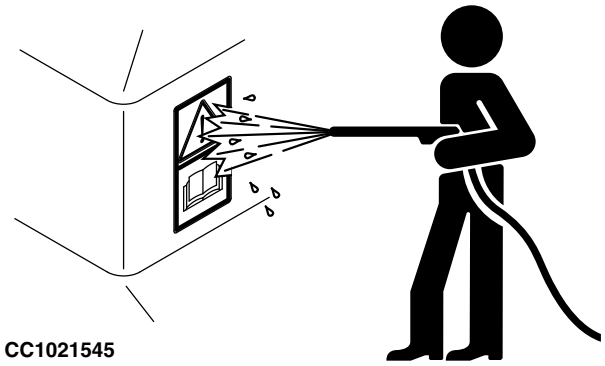

CC1021545—UN—23APR02

Pressurized water can remove or damage safety

decals. Avoid to direct high-pressure jet on safety decals.

Immediately replace missing or damaged safety decals. Replacement safety decals are available from your John Deere dealer.

OUCC006,0000668-19-22APR02

Decommissioning — Proper Recycling and Disposal of Fluids and Components

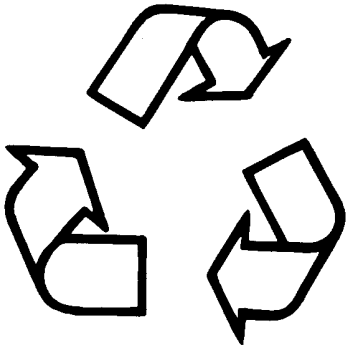

TS1133—UN—15APR13

Safety and environmental stewardship measures must be taken into account when decommissioning a machine and/or component. These measures include the following:

- Use appropriate tools and personal protective equipment such as clothing, gloves, face shields or glasses, during the removal or handling of objects and materials.
- Follow instructions for specialized components.
- Release stored energy by lowering suspended machine elements, relaxing springs, disconnecting the battery or other electrical power, and releasing pressure in hydraulic components, accumulators, and other similar systems.
- Minimize exposure to components which may have residue from agricultural chemicals, such as fertilizers and pesticides. Handle and dispose of these components appropriately.
- Carefully drain engines, fuel tanks, radiators, hydraulic cylinders, reservoirs, and lines before recycling components. Use leak-proof containers when draining fluids. Do not use food or beverage containers.
- Do not pour waste fluids onto the ground, down a drain, or into any water source.
- Observe all national, state, and local laws, regulations, or ordinances governing the handling or disposal of waste fluids (example: oil, fuel, coolant, brake fluid); filters; batteries; and, other substances or parts. Burning of flammable fluids or components in other than specially designed incinerators may be prohibited by law and could result in exposure to harmful fumes or ashes.
- Service and dispose of air conditioning systems appropriately. Government regulations may require a certified service center to recover and recycle air conditioning refrigerants which could damage the atmosphere if allowed to escape.
- Evaluate recycling options for tires, metal, plastic, glass, rubber, and electronic components which may be recyclable, in part or completely.
- Contact your local environmental or recycling center, or your John Deere dealer for information on the proper way to recycle or dispose of waste.

DX,DRAIN-19-01JUN15

Replace Safety Signs

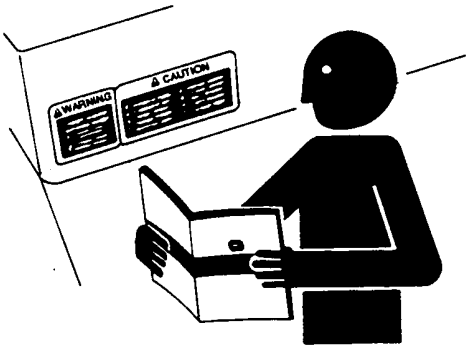

TS201—UN—15APR13

Replace missing or damaged safety signs. Use this operator’s manual for correct safety sign placement.

There can be additional safety information contained on parts and components sourced from suppliers that is not reproduced in this operator's manual.

DX,SIGNS-19-18AUG09

Safety Signs

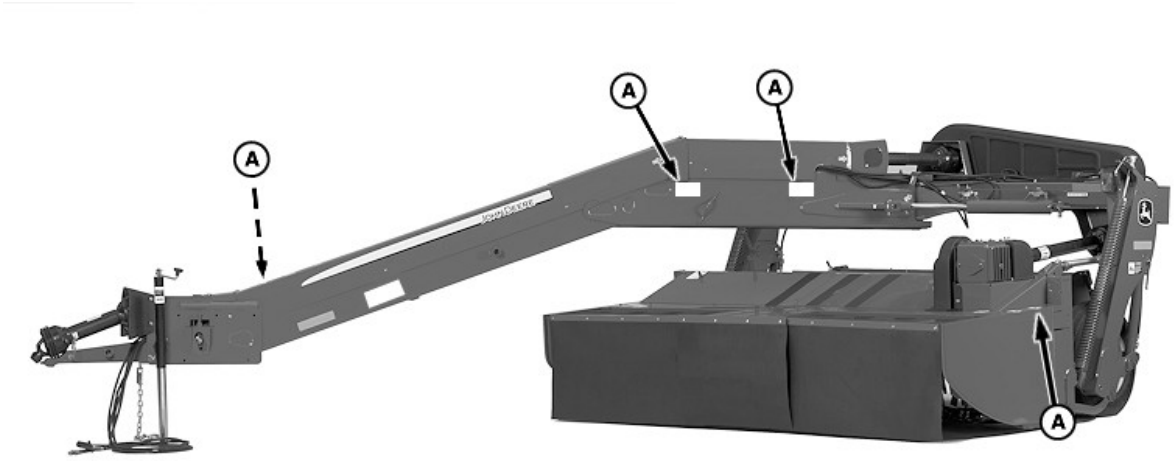

E58187—UN—12NOV09

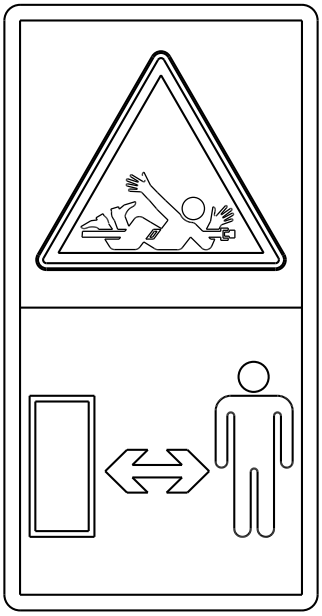

SSE309049—UN—03MAR09

(A) — Danger

(A) — Danger Entanglement in rotating driveline can cause serious injury or death. Keep all shields in place. Avoid contact with rotating parts.

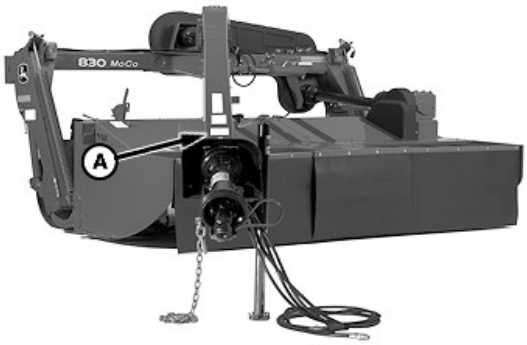

E58188—UN—12NOV09

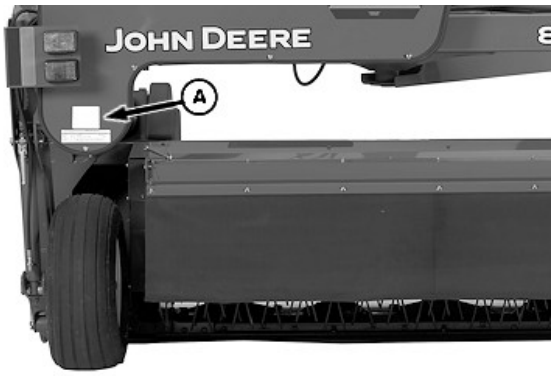

E58189—UN—12NOV09

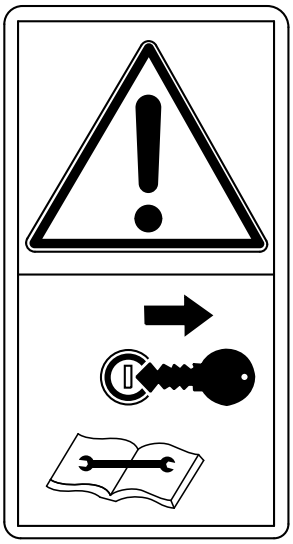

SSZ59872—UN—16JUL08

(A) — Caution

(A) — Caution Keep all shields in place. Disengage and shut off all engine and/or motor power before servicing or unclogging machine. Keep hands, feet, and clothing away from power driven parts.

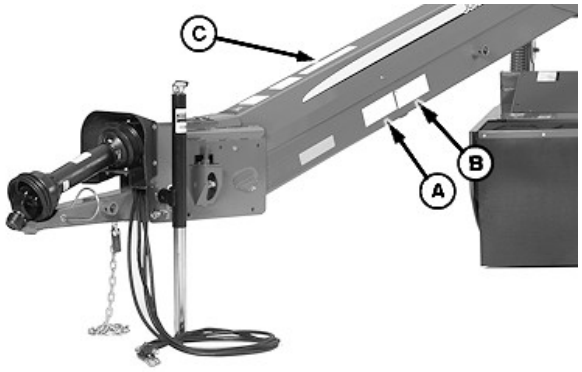

E58211—UN—13NOV09

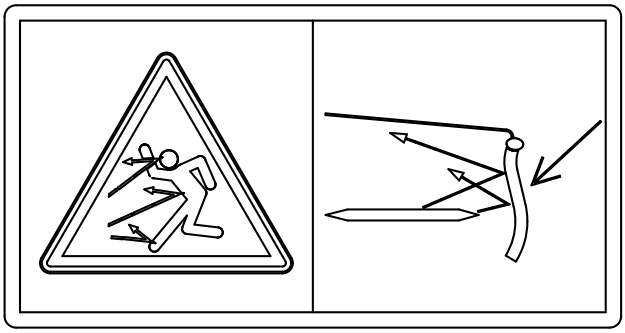

SSE309051—UN—03MAR09

(A) — Warning

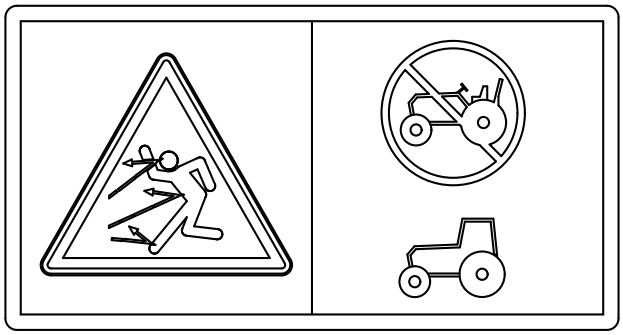

SSE309050—UN—03MAR09

(B) — Warning

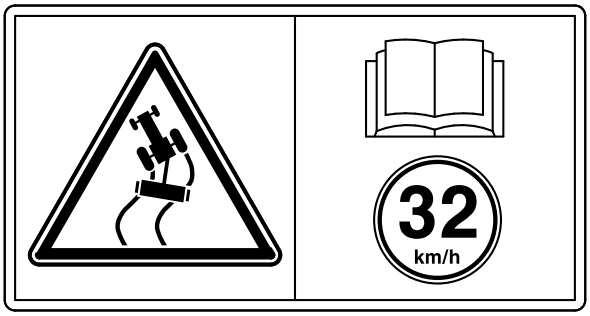

SSA83030—UN—21FEB06

(C) — Warning

NOTE: Decals (A) and (B) are located on both sides of tongue.

(A) — Warning Avoid injury from thrown objects. Keep curtain in place.

(B) — Warning Avoid injury from thrown objects. Use only with a tractor equipped with a complete operator enclosure.

(C) — Warning Do not exceed this implement's maximum transport speed of 32 km/h (20 mph). Exceeding this speed may result in loss of control during transport or braking and serious injury or death. Transport only with a properly ballasted tractor and a properly attached safety tow chain. Do not transport with a motor vehicle. Reduce speed and use additional caution when on inclines, towing under adverse surface conditions, and turning.

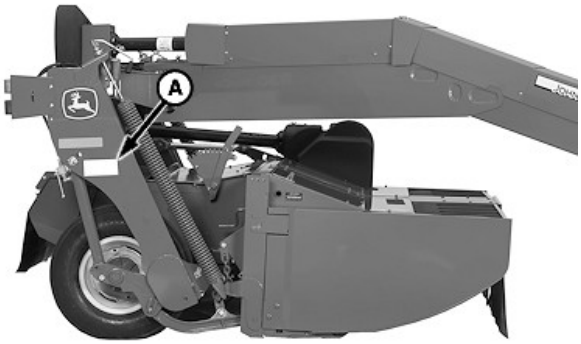

E58192—UN—12NOV09

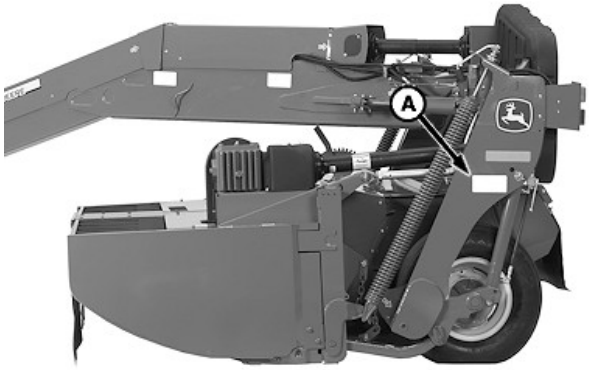

E58191—UN—12NOV09

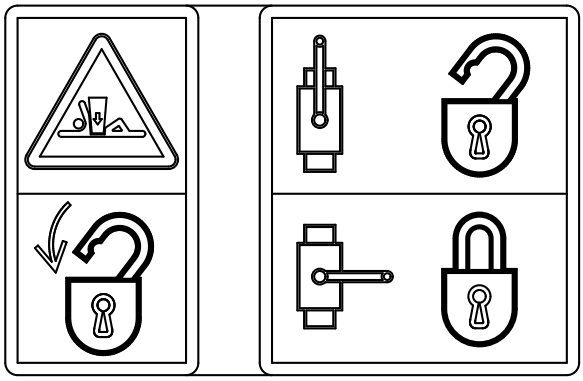

SSE309052—UN—18MAR09

(A) — Danger

(A) — Danger To avoid a serious crushing injury, close hydraulic lockup valve before working under raised harvesting unit.

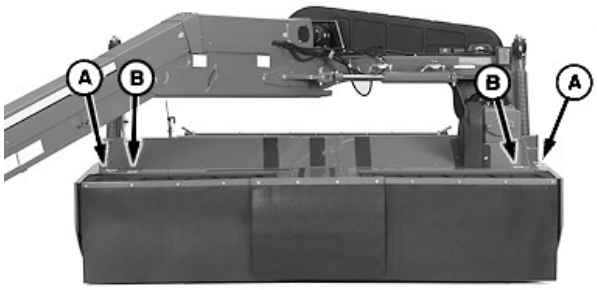

E58195—UN—12NOV09

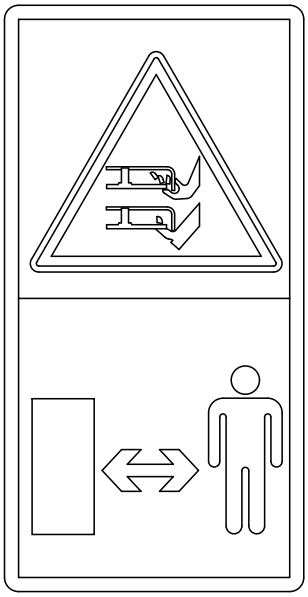

SSE307463—UN—18SEP08

(A) — Warning

SSE309048—UN—03MAR09

(B) — Warning

(A) — Warning Avoid injury from rotating knives. Keep hands and feet away while machine is running. Shut off power to service, lubricate or fold for transport.

(B) — Warning Keep bystanders clear during operation. Machine may change position rapidly when operator actuates tongue swing. See operator's manual to adjust tongue swing speed.

PP98408,0000355-19-13NOV09

Platform (Top) Decals

800 Series Mower-Conditioner

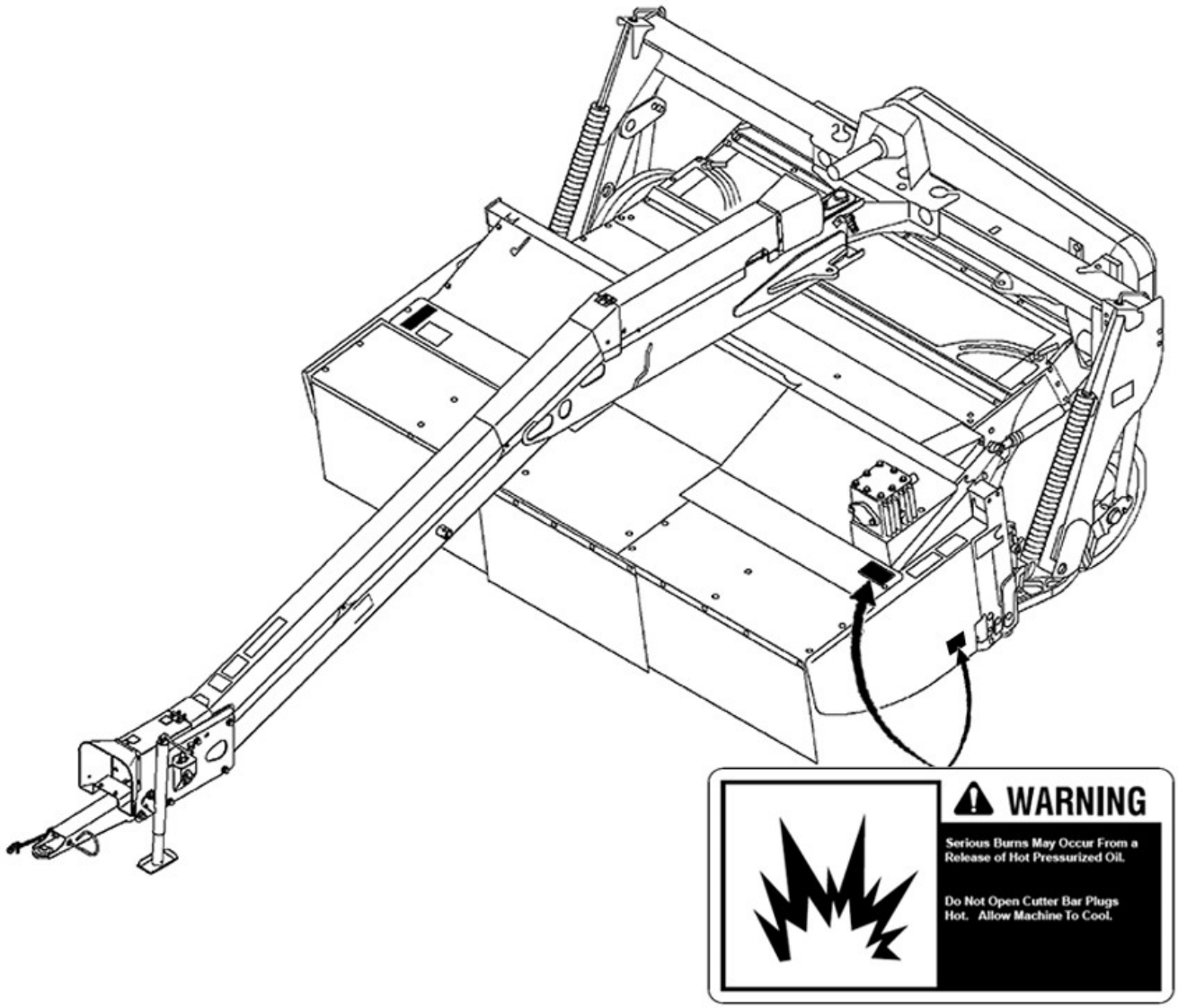

APY43964—19—02NOV20
HK75640,000117E-19-24NOV20

Selecting Tractor PTO Speed

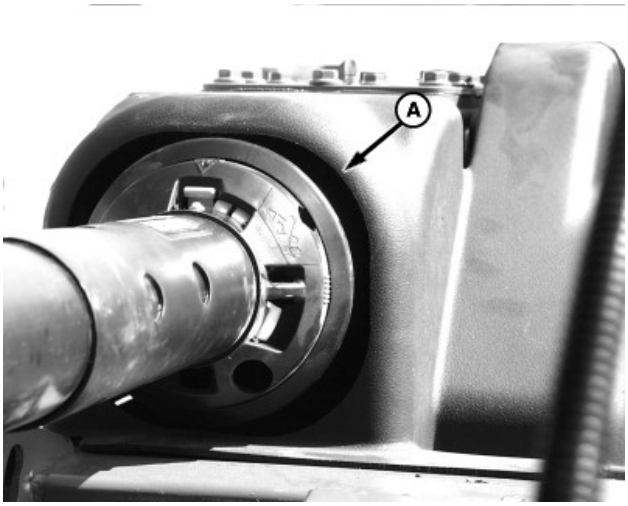

E53691—UN—17SEP04

A—Shield

IMPORTANT: Always run tractor at rated PTO speed. Operating otherwise will cause damage to drive system.

The tractor PTO shaft size must be 1-3/8-in.

Follow the tractor operator's manual to install the appropriate PTO shaft and properly set the PTO speed at 540 or 1000 rpm.

Verify which driveline is connected by shining a light inside PTO shield (A). 540 rpm PTO driveline will have a large round slip clutch inside shield.

Another method of determining PTO speed: Verify which sheave is installed on rear drives. Large (540 rpm) sheave is 435 mm (17.1-in.) in diameter. Small (1000 rpm) sheave is 286 mm (11.26-in.) in diameter.

OUO6085,0000322-19-10APR07

Adjusting Sway Blocks

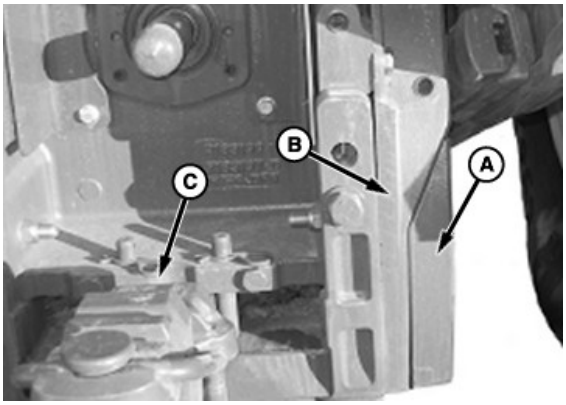

E55026—UN—02MAY07

John Deere 7000 Series Tractor Shown

A—Sway Block (2 used)
B—Support Bracket (2 used)
C—Drawbar

Draft Link Hitch (Category 2 or 3N):

Set sway blocks (A), so minimum distance between arms (center-to-center) is 850 mm (33.5-in.) (spacers outside of arms).

NOTE: Add or remove washers between the head of the bolt and the sway blocks to minimize movement of sway blocks.

If hitch has too much side sway with sway blocks installed, shims may be added between sway block support brackets (B) and PTO housing. Shims are available from your John Deere dealer.

Remove drawbar (C) if it interferes with driveline.

OUO6085,000070B-19-05JUN07

Checking Ballast, Wheel Spacing and Tire Inflation

Provide sufficient weight to stabilize tractor when operating on hilly land or other adverse conditions. (See your tractor operator's manual).

To insure proper stability, adjust ballast, wheel spacing and tire inflation according to tractor operator's manual.

CC03745,0000377-19-14JUN06

Positioning Tractor Drawbar (Standard Hitch)

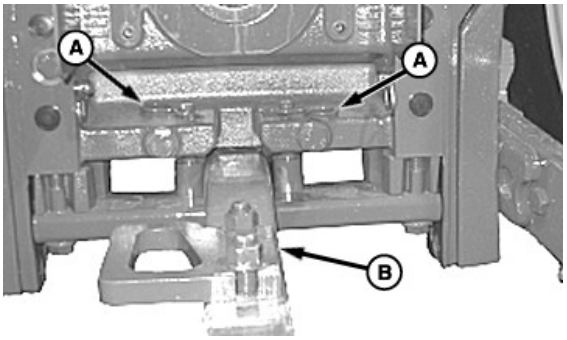

E55027—UN—02MAY07

John Deere 7000 Series Tractor Shown

A—Locking Pins

CAUTION: To avoid personal injury, use locking pins to hold drawbar stationary when operating PTO-driven implements.

NOTE: If using a machine with a swivel tongue, move drawbar to far right or left, or remove drawbar completely.

If drawbar is equipped with a clevis hitch or hammer strap, remove them before positioning drawbar.

1. Install locking pins.

IMPORTANT: Failure to conform to the following setup dimensions can result in serious powerline damage.

2. If drawbar is offset, turn drawbar so offset is down, as shown.

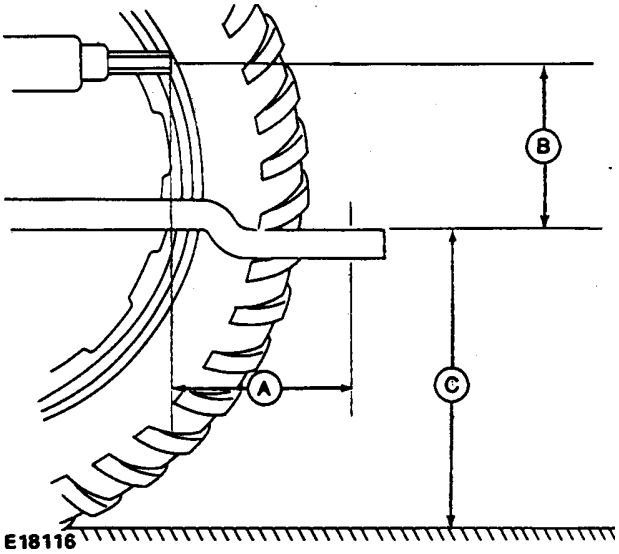

E18116—UN—12SEP88

A—Drawbar Pin Hole Centerline-to-PTO Shaft
B—Top of Drawbar-to-PTO Centerline
C—Ground-to-Top of Drawbar

3. Set drawbar to the following dimensions:

Drawbar Pin Hole Centerline-to-PTO Shaft (A)	**540 rpm PTO**	356 mm (14 in.)
Drawbar Pin Hole Centerline-to-PTO Shaft (A)	**1000 rpm PTO**	406 mm (16 in.)
Top of Drawbar-to-PTO Centerline (B)	152—305 mm (6—12 in.)	
Ground-to-Top of Drawbar (C)	330—508 mm (13—20 in.)	

OUO6085,000070C-19-05JUN07

Using Drawbar Shield (Standard Hitch)

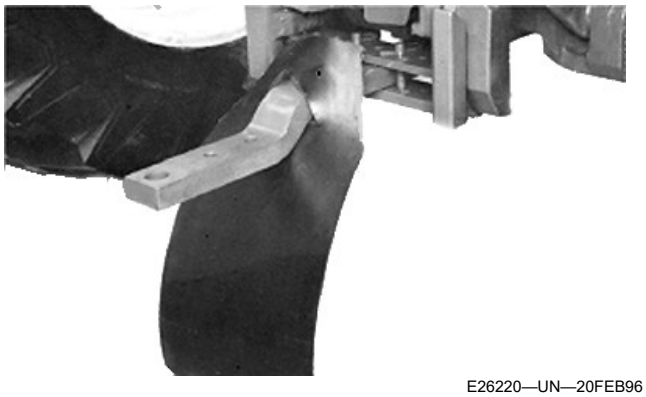

E26220—UN—20FEB96

If a tractor drawbar catches and disturbs the windrow under the tractor, a drawbar shield can be used.

OUO6085,00003CB-19-18JUL05

Making a Drawbar Shield (Standard Hitch)

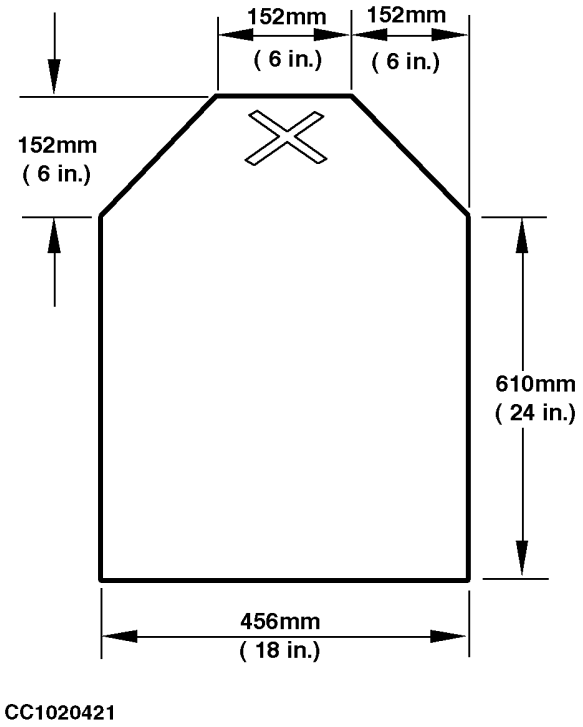

CC1020421—UN—05SEP01

Use the sketch opposite as an example to make a shield using 2 or 4 ply belting.

OUO6085,00003CC-19-18JUL05

Install Drawbar Extension (Standard Tongue and Ball Hitch)

NOTE: There are two different size spacers (G) located inside the drawbar extension. These spacers are to be placed in hole of tractor drawbar to remove slack from pin (B).

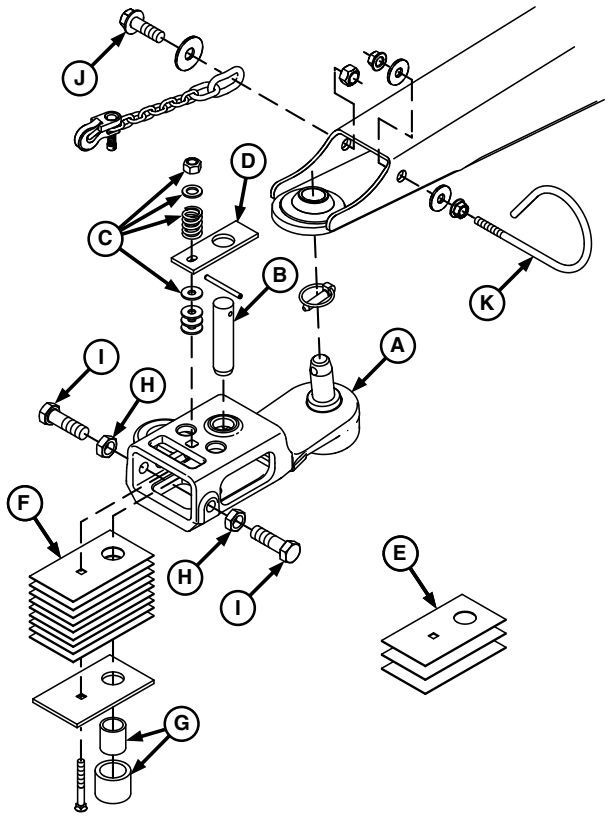

E54603—UN—02JUN06

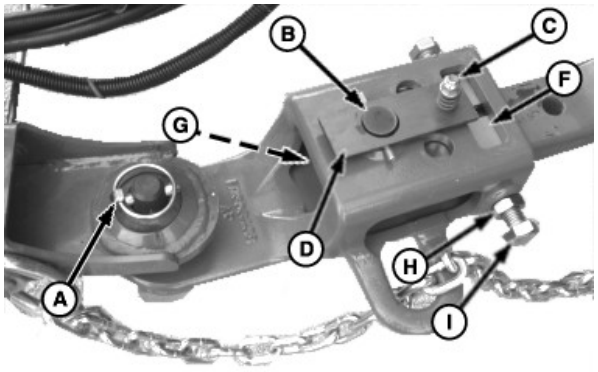

E54637—UN—22JUN06

A—Drawbar Extension
B—Pin
C—Nut, Washers, Spring
D—Retainer
E—Spare Shims
F—Shims
G—Spacers
H—Nut (2 used)
I—Bolt (2 used)
J—M16 x 50 Cap Screw, 50 x 30 mm Washer and Nut
K—Hose Bracket

1. Remove locknut, washer, spring (C) and retainer (D).

NOTE: Four washers should remain on cap screw after spare shims are removed.

2. Remove spare shims (E) and reinstall retainer (D), spring, washer and locknut (C).
3. Place correct spacer (G) in hole of drawbar. Place pin (B) through spacer in drawbar and place retainer (D) over top of pin.
4. Place nuts (H) on bolts (I) and insert in holes on each side of drawbar extension (A). Snug bolts (I) against drawbar, center extension and tighten nuts (H) to hold bolts in place.

NOTE: Ensure bend in chain link is facing away from tongue extension. Failure to do so may cause link to hit spring locking pin in drawbar extension.

5. Install safety chain with M16 x 50 cap screw (J), 50 x 30 mm washer and nut on right-hand side of tongue extension.
6. Fasten hydraulic hose bracket (K) on left-hand side of tongue extension with two M10 nuts and washers.
7. Place hydraulic hoses through bracket (K) and bend end of bracket to close loop around hoses.

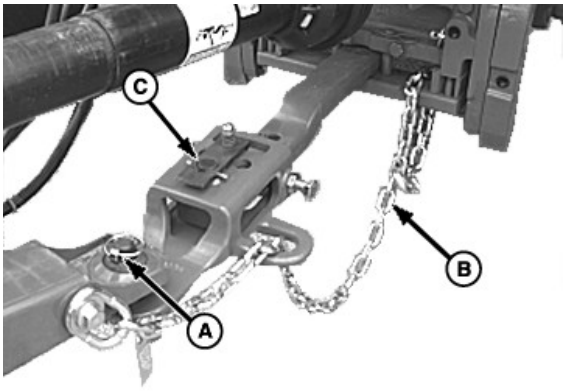

E54638—UN—25JUL06

A—Quick-Lock Pin
B—Safety Chain

8. Attach mower-conditioner to tractor drawbar and install quick-lock pin (A).
9. Install safety chain (B). Leave only required chain slack to allow turns.

NOTE: See your tractor operator's manual for correct routing and attachment of safety chain.

10. Fully raise tractor draft links. Make sure that tractor draft links will not interfere with mower-conditioner tongue and transmission.

OUO6085,00006F2-19-02APR07

Setting Selective Control Valves

The tractor must have a minimum of 15500 kPa (155 bar) (2250 psi) hydraulic flow pressure.

The tractor must have two selective control valves: a single acting valve for platform lift circuit and a double acting valve for hydraulic tongue positioning.

Adjust SCV lever for no detent or adjust detent time to 0 so lever returns to neutral when released.

NOTE: Refer to your tractor operator's manual for:

- *Recommended single acting cylinder outlet (mower-conditioner lift circuit)*
- *Adjusting SCV lever detent*

CC03745,00005B0-19-01DEC03

Checking Tire Inflation

830 and 835 Mower-Conditioner	
Tire Size	**Pressure**
11L15	310 kPa (3.1 bar, 45 psi)
31/13.5-15	255 kPa (2.6 bar, 37 psi)

OUO6085,000076D-19-24MAY07

Checking Wheel Hardware Torque

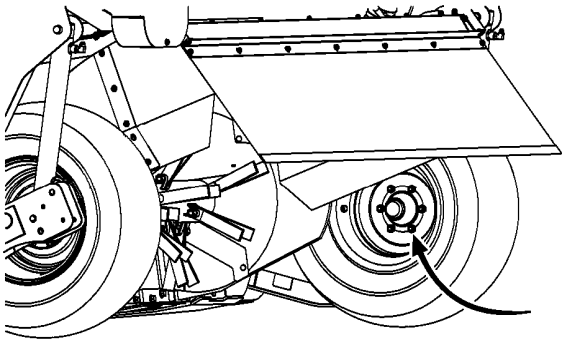

E55076—UN—21MAY07

IMPORTANT: Wheels should be installed with valve stems to the inside. Incorrect assembly can cause wheel hardware to loosen.

Check wheel hardware torque after the first 10 hours of use.

Whenever a wheel has been removed and installed, check torque after one hour of operation. Wheel hardware should be tightened to specification:

Specification

Wheel Nuts—Torque. . . . . 115 N·m (85 lb-ft)

OUO6085,0000746-19-14MAY07

Adjusting Equal Angle Hitch

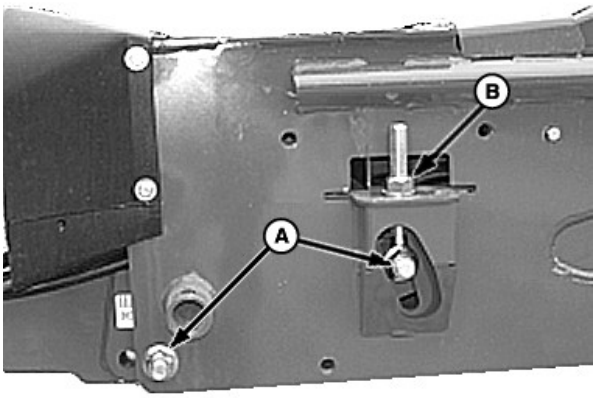

E54609—UN—25MAY06

A—Bolts
B—Nut

IMPORTANT: Driveline must be level when operating mower-conditioner. Put equal angle hitch in correct position to prevent driveline damage.

1. Park the mower-conditioner centered behind tractor on level ground.
2. Lower platform.
3. Engage tractor parking brake and place transmission in "Park".
4. Shut off tractor engine and remove key.
5. Measure distance between centerline of tractor PTO shaft and the ground.
6. The measured distance must be equal to the distance between center of the input shaft on the tongue and the ground.

   If not, adjust equal angle hitch as follows:

   a. Attach jack to front support and lift tongue until weight is off from tractor drawbar.
   b. Loosen bolts (A).
   c. Turn adjustment nut (B) until driveline is level.
   d. Lubricate nut with light oil before installation.

e. Tighten bolts (A) to specifications.

Specification

Bolt (A)—Torque. . . . . 540 N·m (400 lb-ft)

f. Lower jack until full weight is on tractor drawbar.

g. Make sure driveline is level. If not, readjust equal angle hitch.

OUO6085,0000527-19-11JUN08

Determining Need for Turn Limiters

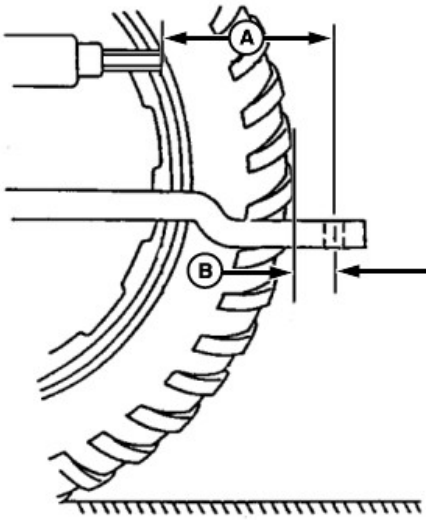

E53883—UN—23NOV04

A—Distance, 540 rpm: 355 mm (14.0 in.)
Distance 1000 rpm: 406 mm (16.0 in.)
B—Distance (See chart)

IMPORTANT: Turn limiters may be required to prevent driveline damage if tractor hitch point is beyond rear drive tires.

To determine if turn limiters are required:

1. Set tractor drawbar in proper position to give dimension (A) from end of PTO shaft to drawbar hitch pin hole.
2. Measure distance (B) from full diameter of tire to center of hitch pin hole. Use chart to determine if turn limiters are required.

HITCH TYPE	NO TURN LIMITER REQUIRED	SMALL TURN LIMITER REQUIRED	LARGE TURN LIMITER REQUIRED
540 rpm Ball Hitch	B is less than 115 mm (4-1/2 in.)	B is 115—245 mm (4-1/2—9-5/8 in.)	B in 245—315 mm (9-5/8—12-3/8 in.)
1000 rpm Ball Hitch	B is less than 165 mm (6-1/2 in.)	B is 165—295 mm (6-1/2—11-5/8 in.)	B is 295—365 mm (11-5/8—14-3/8 in.)

OUO6085,000052F-19-26SEP07

Install Narrow Turn Limiters (If Required)

CAUTION: Turn limiters are very heavy. Use care when lifting.

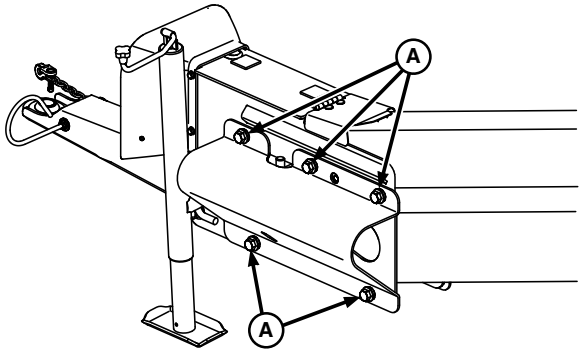

E54607—UN—02JUN06

A—M16 x 40 Cap Screws and Washers (10 used)

1. Adjust hitch. (See ADJUSTING EQUAL ANGLE HITCH in this section.)
2. Install turn limiters. Fasten with five M16 x 40 cap screws and washers (A).
3. Repeat on opposite side.

OUO6085,0000806-19-11JUN08

Install Wide Turn Limiters (If Required)

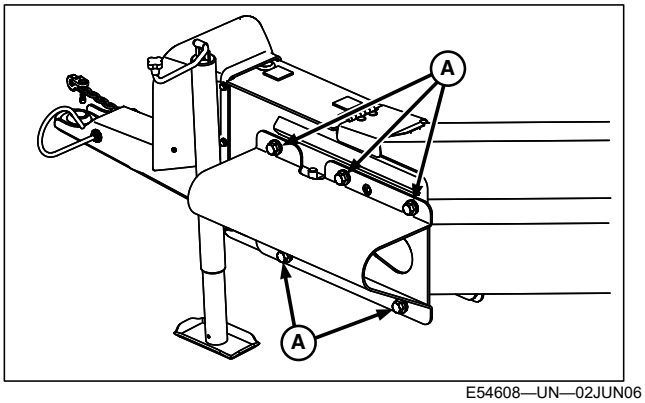

E54608—UN—02JUN06

A—Round-Head Bolts, M16 x 40 Cap Screws and Washers (10 used)

1. Adjust hitch. (See ADJUSTING EQUAL ANGLE HITCH in this section.)
2. Install turn limiters. Fasten with five M16 x 40 cap screws and washers (A).

3. Repeat on opposite side.

OUO6085,0000807-19-11JUN08

Attaching to Tractor

CAUTION: To avoid bodily injury or machine damage whenever an implement is attached, put transmission in PARK position. Check the full range of hitch for interference, binding, or PTO separation.

Do not stand between tractor and implement.

1. Turn tractor load/depth control fully counterclockwise (depth control position).

CAUTION: To prevent possible injury, use ONLY hitch control lever when attaching implements. DO NOT use raise/lower switch.

2. Back up the tractor to mower-conditioner until hitch points are in alignment.
3. Disengage the PTO, place transmission in PARK, apply handbrake, shut off engine, and remove key.

Standard Hitch Only:

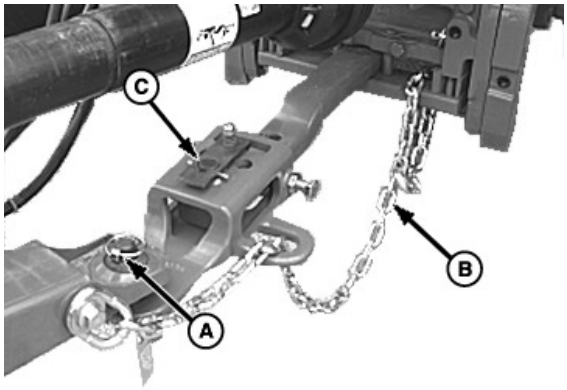

E54638—UN—25JUL06

A—Quick-Lock Pin
B—Safety Chain

1. Attach mower-conditioner to the tractor drawbar and install the quick-lock pin (A).
2. Install safety chain (B). Leave only required chain slack to allow turns.
3. Fully raise the tractor draft links. Make sure that tractor draft links do not interfere with the mower conditioner tongue and transmission.

Swivel Hitch (With Downstop Chain and Bolt with Washer)

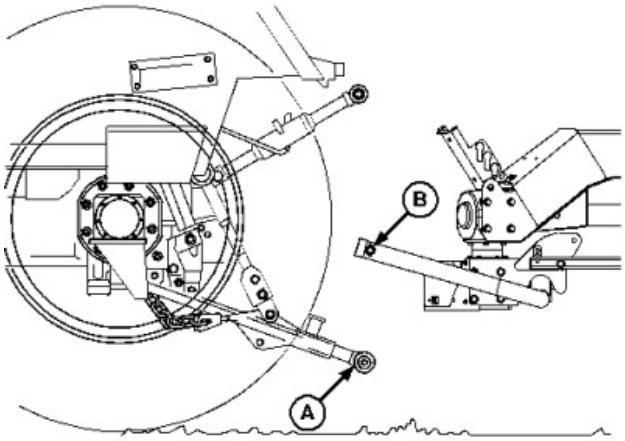

E54301—UN—27JUN05

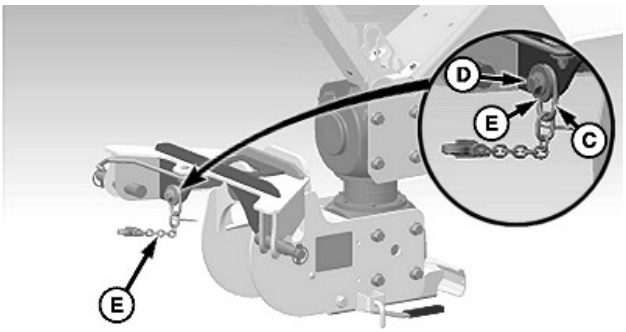

E81585—UN—15AUG16

A—Draft Links
B—Lower Hitch Pins
C—Washer
D—Bolt
E—Chain

1. Connect the two draft links (A) to lower hitch pins (B) and fasten with the quick lock pins. Place tongue height resume chain (E) over M16 x 55 bolt (D) and washer (C). Install bolt (D) into the right-hand side of threaded hitch pin. Toque bolt to specification.

Specification

Bolt—Torque. . . . . 350 N·m (255 lb·ft)

2. Start Tractor engine.
3. Slowly pull hitch control lever to raise mower-conditioner hitch. Check for interference. Lower hitch to jackstand and adjust if necessary.
4. Raise hitch until main PTO driveline is just over horizontal position.
5. Attach one chain link to the tractor so chain (E) is loose while the PTO driveline is in horizontal position.

IMPORTANT: Failure to attach downstop chain results in driveline separation or damage.

Always operate machine with the PTO driveline level. Never operate machine with hitch fully raised or lowered. Failure to do so damages the tractor and mower-conditioner.

6. Adjust lift links and lateral float. (See tractor operator's manual.)

GW44282,00006E4-19-28OCT16

PTO Speed

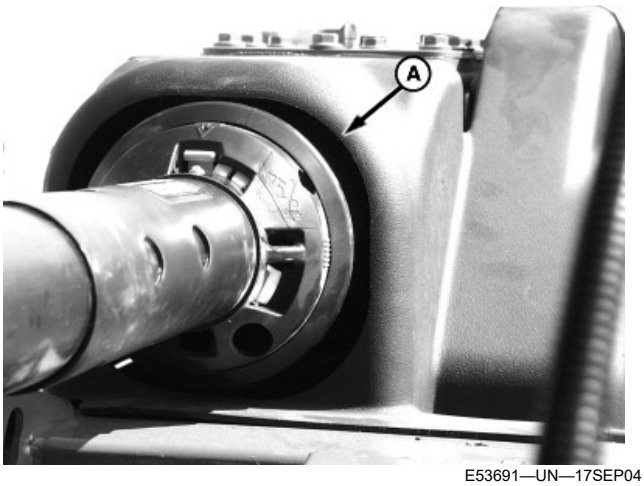

E53691—UN—17SEP04

A—Shield

IMPORTANT: Always run tractor at rated PTO speed. Operating otherwise will cause damage to drive system.

Verify tractor and mower-conditioner are set for the same PTO speed.

- 540 rpm PTO - six spline tractor shaft
- 1000 rpm PTO - 21 tooth tractor spline shaft

Refer to tractor operator's manual to change tractor PTO speed.

OUO6085,0000321-19-26SEP07

Assembling Main PTO Driveline Splined Telescoping Members (If Necessary)

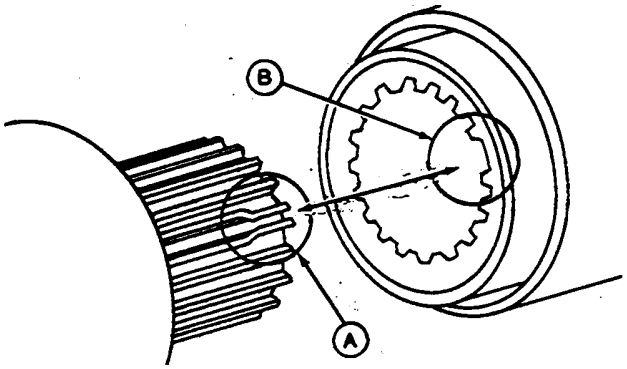

E23802—UN—22SEP88

A—Crimped Shaft Teeth
B—Groove in Sleeve

1. Wipe excess grease from shaft and sleeve to see timing marks.

NOTE: Some drivelines use small weld in place of crimped teeth to align splines for proper phasing.

2. Align crimped pair of shaft teeth (A) with locating groove in sleeve (B).
3. Assemble telescoping members together.
4. Apply multipurpose grease, or equivalent, to lubrication fitting at sleeve before operating. (See “Lubrication and Maintenance” section.)

OUO6085,00007F5-19-24JUL07

Attaching PTO Driveline

TS198—UN—23AUG88

CAUTION: Shut off tractor engine before attaching PTO driveline. Entanglement in rotating driveline can cause serious injury or death.

IMPORTANT: Keep driveline and powershaft splines clean of paint, dirt and chaff. Apply John Deere Moly High Temperature EP Grease or John Deere EP Moly Grease on tractor PTO shaft before attaching PTO driveline.

1. Shut off tractor engine.

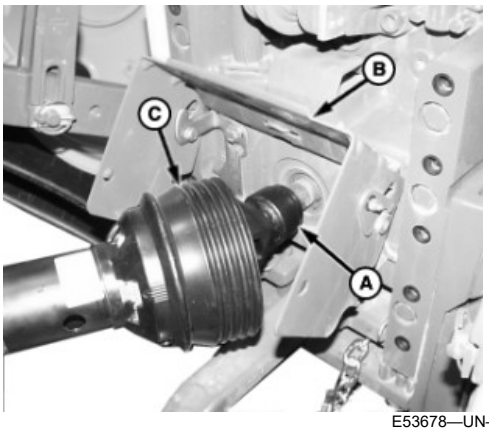

E53678—UN—01DEC04

A—Collar
B—PTO Shield
C—Shield

2. Raise tractor PTO shield (B), if equipped.
3. Pull back on collar (A).
4. Align splines by rotating mower-conditioner driveline. Push driveline onto tractor PTO shaft until collar (A) snaps forward.
5. To check if latched, pull back on shield (C). Do not pull on collar (A), as this will release latch.
6. Lower tractor PTO shield.

OUO6085,0000218-19-19JUL06

Tractor Electrical Connection

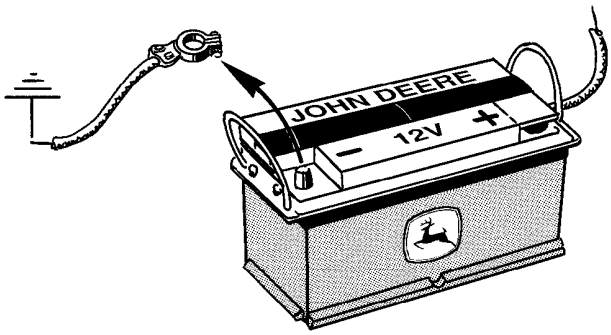

CC1020363

CC1020363—UN—23AUG01

IMPORTANT: All electrical equipment installed on this machine are designed for use on 12 Volt electrical systems with negative ground.

CC03745,000030E-19-04JAN02

Connecting Tail/Warning Light Plug to Tractor

NOTE: Field installation of Seven-Terminal Auxiliary Electric Kit (RE17282) is required if towing tractor is not equipped with an electrical outlet.

Make sure machine tail and warning lights operate with tractor tail and warning lights and turn signals.

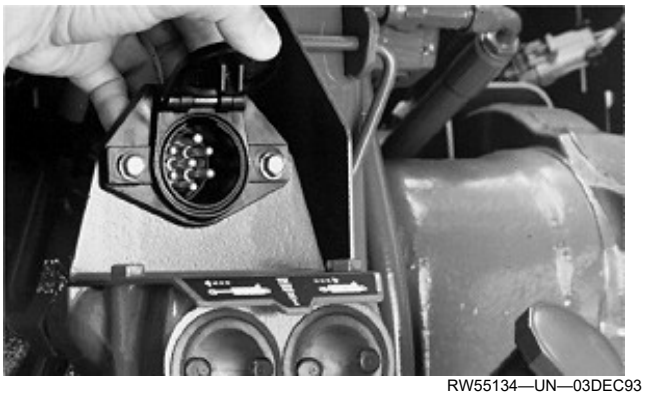

RW55134—UN—03DEC93

Tractor Seven-Terminal Outlet

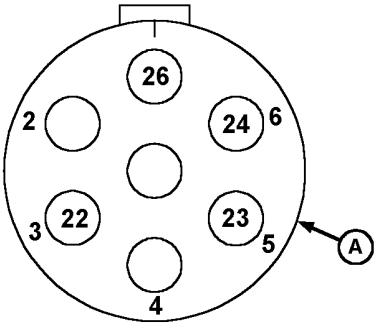

E47996—UN—04APR00

Machine Lighting Plug

A—Machine Lighting Plug

Connect machine lighting plug (A) to seven-terminal outlet on tractor. Check tail/warning light.

Terminal	Circuit	Function	Wire Color
1	26	Ground	Black
2		Open	
3	22	Left-Hand Turn/Warning Light	Yellow
4		Open	
5	23	Right-Hand Turn/Warning Light	Green
6	24	Tail Lights	Brown
7		Open	

CC03745,00005CD-19-15DEC03

Connecting Mower-Conditioner to Tractor Hydraulic System

CAUTION: Maximum working pressure of mower-conditioner hydraulic hoses is about 20000 kPa (200 bar; 2900 psi).

Avoid personal injury and/or machine damage by placing hydraulic flow control in “slow” position.

1. If equipped, push tractor selective control valve lever lockouts to transport lock.

IMPORTANT: All hydraulic couplers must be clear of debris, dust and sand. Use protective caps on fluid openings until ready to make connection. Foreign material can damage the hydraulic system.

NOTE: ISO hydraulic couplers are standard with the mower-conditioner. If they do not fit the tractor, see your John Deere dealer.

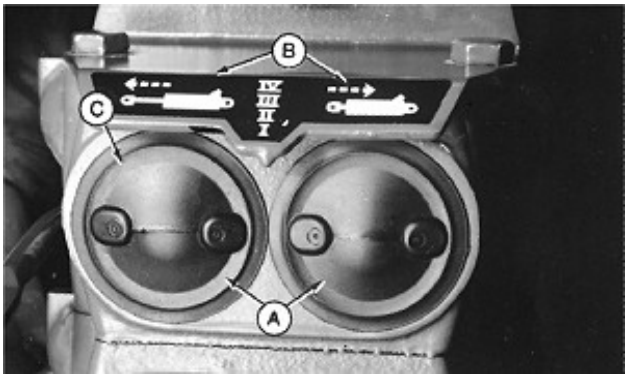

RW21239—UN—18JUN92

John Deere 7000 Series Tractor Shown

A—Dust covers
B—Tractor symbols
C—Receptacles

2. Clean off dust covers (A).
3. Connect hydraulic platform lift hose to a single-acting selective control valve (extended side receptacle (C) (SCV I).
4. Connect hydraulic tongue swing cylinder hoses to a double-acting selective control valve (next set of tractor receptacles (SCV II).
5. Push hoses firmly into tractor receptacles. (Refer to tractor operator's manual for proper hydraulic connections

OUO6085,000075E-19-19AUG08

Securing the Jackstand in Transport Position

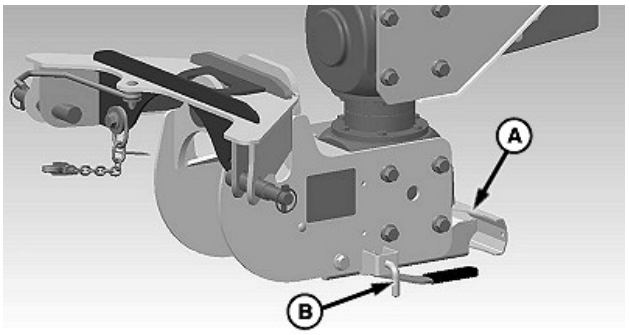

E81659—UN—11OCT16

Jackstand on Swivel Hitch

A—Jackstand
B—Locking Pin

When operating or transporting the mower-conditioner, always store jackstand as shown.

Jackstand on swivel hitch:

Secure jackstand (A) with locking pin (B).

Jackstand on standard hitch:

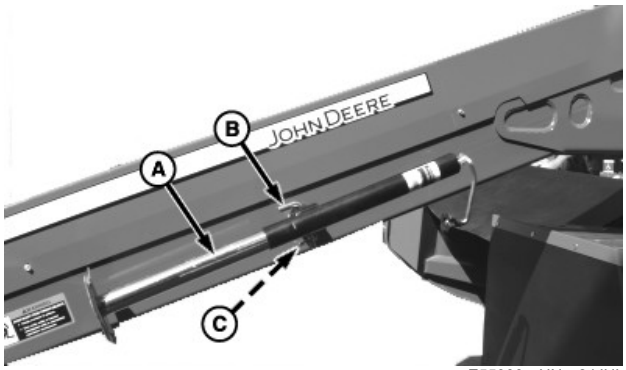

E55366—UN—24JUL07

Jackstand on Standard Hitch

A—Jackstand
B—Pin
C—Quick-Lock-Pin

Secure jackstand (A) with pin (B) and quick-lock pin (C).

GW44282,0000700-19-17OCT16

Setting Tongue Swing Time

Set the flow of SCV to give a tongue swing time of 6 to 8 seconds for tongue to swing from one side to the other. (See your tractor operator's manual.)

If swing speed is more than 8 seconds, see “Troubleshooting” section.

CC03745,00005AF-19-13JUN06

Detaching from Tractor

CAUTION: To prevent injury to bystanders, do not allow persons to remain in the vicinity when detaching the machine.

1. Park mower-conditioner on a level surface, or block mower-conditioner wheels so machine cannot roll after detaching from the tractor.
2. Lower platform.
3. Make sure tractor load/depth control is in-depth control position.

CAUTION: If equipped, push tractor SCV lever lockouts to transport lock before detaching implements to prevent implement movement and possible personal injury.

CAUTION: To prevent possible injury, use ONLY hitch control lever when detaching implements. DO NOT use raise/lower switch.

4. Slowly pull hitch control lever to raise mower-conditioner hitch. Check for interference.

   Engage tractor parking brake, place transmission in Park, disengage PTO, shut off the tractor engine, and remove key.

Swivel Hitch (Detaching)

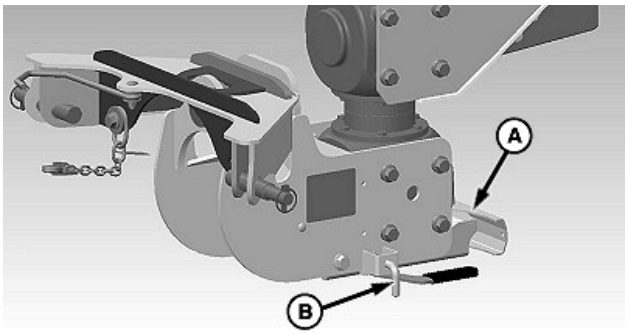

E81659—UN—11OCT16

Jackstand on Swivel Hitch

A—Jackstand
B—Locking Pin

1. Remove locking pin (B) and lower jackstand (A). Secure with locking pin (B).
2. Disconnect road light plug and hydraulic hoses. Install protective caps on couplers.

   Store wiring harness and hydraulic hoses, avoiding contact with the ground to keep them clean.
3. Detach tongue height resume chain from the tractor, if equipped.
4. Raise tractor PTO shield (B), if equipped.

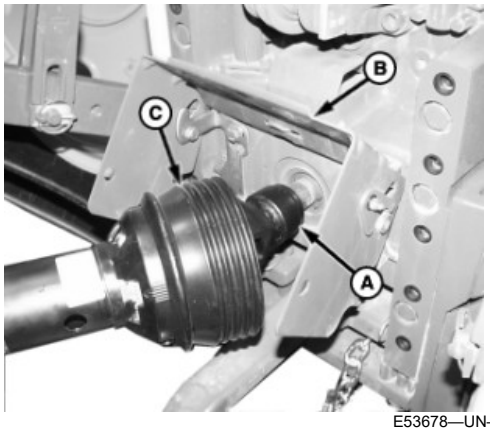

E53678—UN—01DEC04

A—Collar
B—PTO Shield
C—Driveline

5. Support driveline (C) and pull back on collar (A). Slide driveline (C) off tractor shaft. Secure driveline (C) with cable.
6. Lower tractor PTO shield.
7. Start tractor and slowly push hitch-control lever to lower mower-conditioner hitch to the ground.
8. Engage tractor parking brake, place transmission in Park, shut off the tractor engine, and remove key.
9. Slide draft links away off hitch pins.
10. Carefully drive the tractor away.

Standard Hitch (Detaching)

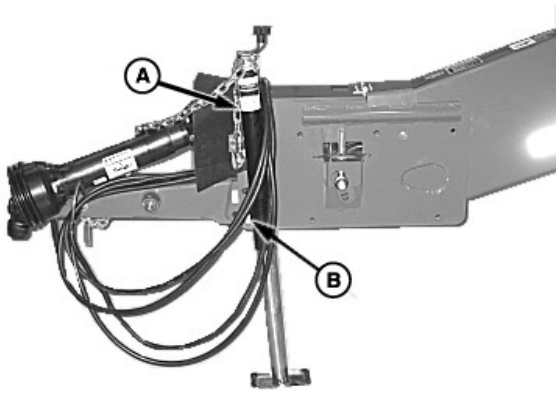

E55022—UN—16MAR07

A—Jackstand
B—Pin and Locking Pin

1. Remove jackstand from storage position.
2. Install jackstand (A) on the front of tongue and secure with pin (B) and locking pin.
3. Disconnect road light plug and hydraulic hoses. Install protective caps on couplers.
4. Store wiring harness and hydraulic hoses, avoiding contact with the ground to keep them clean.
5. Detach tongue height resume chain from the tractor, if equipped.

6. Remove safety chain.
7. Raise tractor PTO shield (B), if equipped.

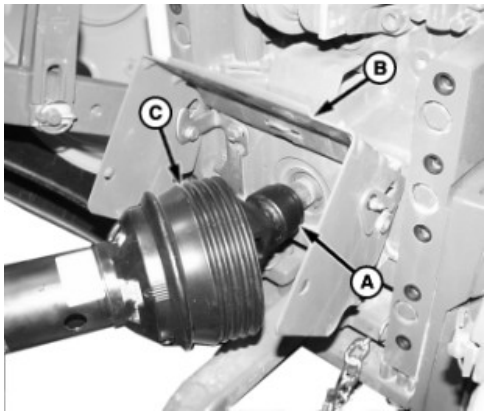

E53678—UN—01DEC04

A—Collar
B—PTO Shield
C—Driveline

8. Support driveline (C) and pull back on collar (A). Slide driveline (C) off tractor shaft.
9. Lower tractor PTO shield.
10. Start tractor and slowly push hitch control lever to lower mower-conditioner hitch to the ground.
11. Engage tractor parking brake, place transmission in Park, shut off the tractor engine, and remove key.
12. Remove cap screws from tractor drawbar and tongue extension. Turn tongue extension to one side, place cap screws, and washers in tongue extension for storage.
13. Carefully drive the tractor away.

GW44282,0000702-19-28OCT16

PTO Storage

Swivel Tongue PTO Storage

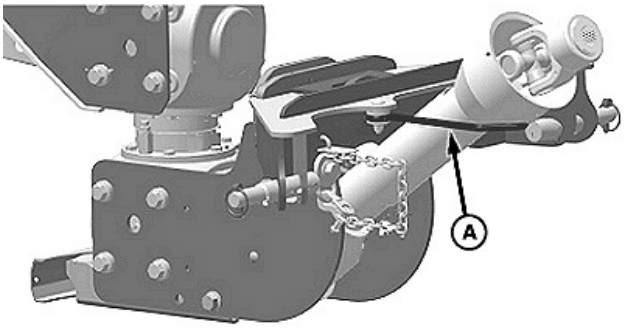

E81692—UN—13OCT16
Swivel Tongue PTO Storage

A—Hook

To store PTO, position PTO on hook (A).

Equal Angle Tongue, Clevis Extension

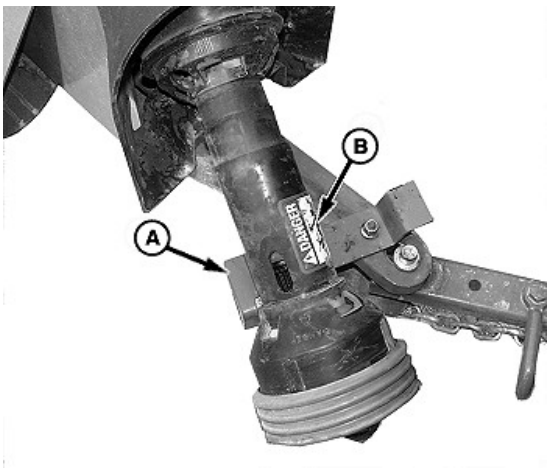

E81693—UN—13OCT16
Equal Angle Tongue, Clevis Extension

A—Pin Retainer
B—PTO

To store PTO driveline on clevis extension of an equal angle tongue, slide pin retainer (A) out to approximately 100 degree angle. Position PTO (B) on retainer.

Equal Angle Tongue, Ball Extension

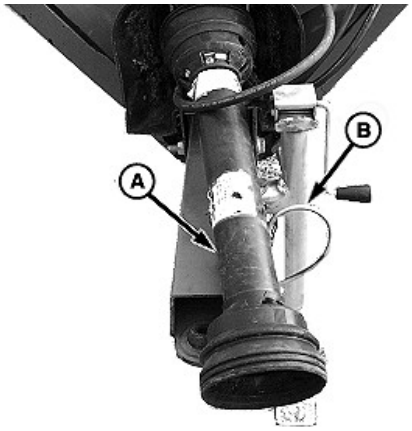

E81694—UN—13OCT16
Equal Angle Tongue, Ball Extension

A—PTO
B—Hydraulic Hose Support

To store PTO driveline on ball extension of an equal angle tongue, position PTO (A) on hydraulic hose support (B).

GW44282,0000703-19-17OCT16

Preparing Mower-Conditioner for Transport

The construction of this implement may not meet all local or national requirements for operation on a public roadway. In regions or countries that have national certification requirements for roadway operation, it may be impossible for this implement to be approved for such roadway operation. The customer is responsible for understanding and complying with all local, regional, and national requirements regarding roadway operation.

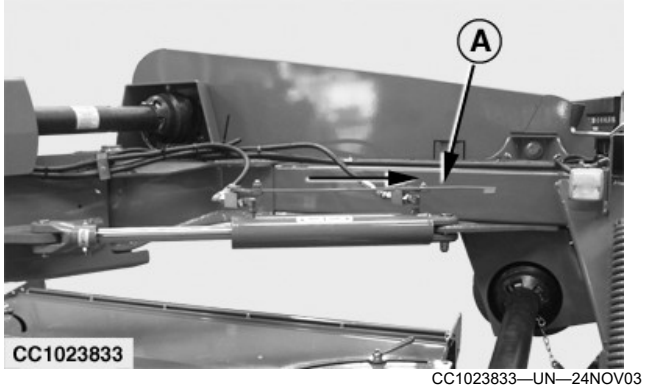

CC1023833—UN—24NOV03

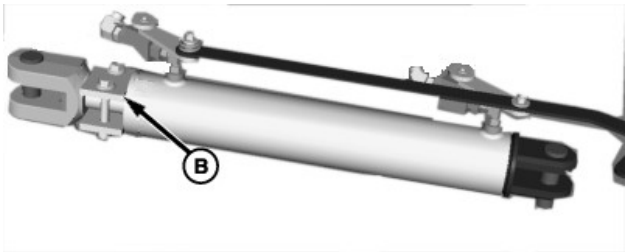

E54792—UN—31JUL06

A—Transport Lock Lever
B—Limiter Block

NOTE: Transporting wide equipment may require additional precautions. Check local public road regulations.

1. Be sure road lighting, marking and reflectors are clean and visible.
2. Raise platform and engage transport lock (A).

IMPORTANT: 830 Mower-Conditioner uses a limiter block on cylinder rod to limit travel. Do not operate without limiter block (B) in place, or machine damage could occur.

3. Activate tongue swing circuit to move mower-conditioner to desired position for transport.

   Recommended transport position is to have the machine centered behind tractor

CAUTION: Transport lock lever must be engaged during transport to prevent mower-conditioner from swaying side-to-side on roads.

4. Pull transport lock lever (A) back away from tongue to close off swing cylinder ports, locking mower-conditioner in position.

PP98408,0000356-19-12NOV09

Use Safety Lights and Devices

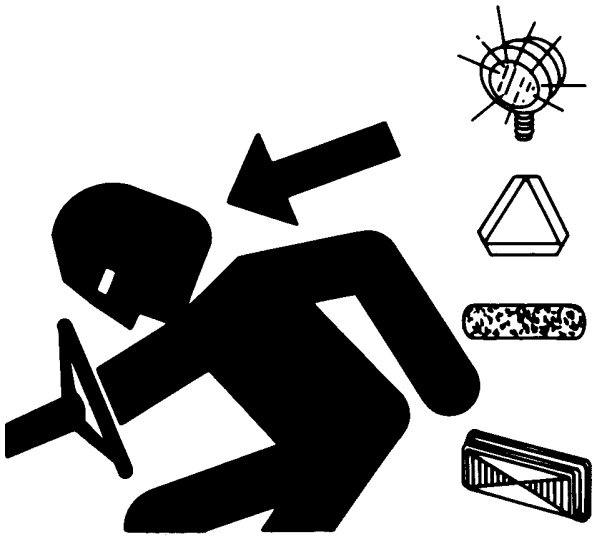

TS951—UN—12APR90

Prevent collisions between other road users, slow moving tractors with attachments or towed equipment, and self-propelled machines on public roads. Frequently check for traffic from the rear, especially in turns, and use hand signals or turn signal lights.

Use headlights, flashing warning lights, and turn signals day and night. Follow local regulations for equipment lighting and marking. Keep lighting and marking visible and in good working order. Replace or repair lighting and marking that has been damaged or lost.

CC03745,0000378CONV1-19-15MAR02

Towing Mower-Conditioner on Public Roads

H28930—UN—30JUN89

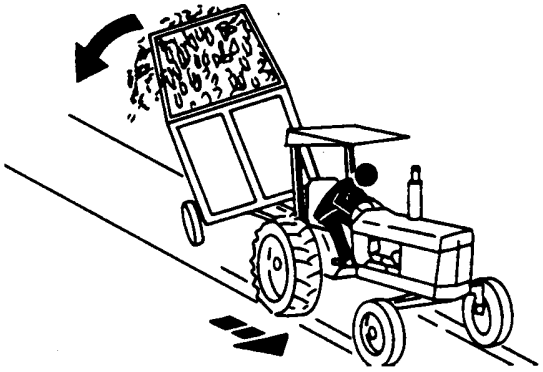

TS216—UN—23AUG88

CAUTION: Use care when towing this machine at transport speeds. Reduce speed if the weight of the machine exceeds weight of tractor.

IMPORTANT: Always observe local road traffic regulations when driving on public roads.

The maximum transport speed for this implement is 32 km/h (20 mph).

Some tractors are capable of operating at speeds that exceed the maximum transport speed of this implement. Regardless of the maximum speed capability of the tractor being used to tow this implement, do not exceed the implement's maximum transport speed.

Use additional caution and reduce speed when towing under adverse surface conditions, when turning, and when on inclines.

Do not attempt transport if the fully loaded implement weighs more than 1.5 t (3,300 lb) and more than 1.5 times the weight of the tractor.

Never tow this implement with a motor vehicle.

CC03745,00005D5-19-24MAY12

Breaking-in Mower-Conditioner

CAUTION: Stay away from the machine while it is running. Always disengage PTO, shut off tractor engine and remove key before inspecting machine to avoid personal injury.

1. Lower machine to the ground.
2. Run machine empty at slow idle speed for 15 minutes.
3. Disengage PTO, shut off tractor engine and remove key.
4. Inspect machine.
5. Run machine at rated PTO speed (540 or 1000 rpm) for 15 minutes.
6. Disengage PTO, shut off tractor engine and remove key.
7. Inspect machine.
8. Check wheel hardware torque after the first 10 hours of use (see “Checking Wheel Hardware Torque” in “Preparing the Mower-Conditioner” Section).
9. Change oil in cutterbar and gear cases after the first 50 hours of use.

CC03745,00002DC-19-12MAY05

Follow Safe Operating Procedures

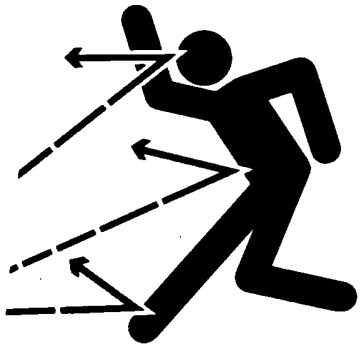

TS265—UN—23AUG88

CAUTION: To avoid bodily injury or death, practice the following procedures:

Never operate mower-conditioner when other people are in the vicinity. Stones and other objects can be thrown great distances by the rotating cutting blades. Keep curtains in place to reduce the potential for thrown objects.

Operate mower-conditioner only with a tractor equipped with a complete operator enclosure. Always close doors and windows of operator enclosure before operating the machine.

Before starting machine, lower platform to the ground. Engage tractor PTO and gradually increase the speed.

Operate tractor at rated PTO speed. If engine speed is too slow or too fast, machine may not perform properly.

Where conditions make it necessary to slow ground speed, shift to a lower gear rather than reducing engine speed. The engine will maintain rated speed and keep conditioner and cutterbar running at optimum mowing and conditioning speed.

Operate machine from tractor seat only.

Never adjust machine while in motion.

Slow down when turning or traveling over rough ground.

Engage tractor parking brake, place transmission in "Park", disengage PTO, shut off tractor engine, and remove key before leaving the tractor unattended.

CC03745,00005D6-19-24MAY12

Daily Checks

CAUTION: To avoid bodily injury, disengage PTO, shut off tractor engine and remove key before starting prechecks.

Inspect and service machine before starting work each day:

- Check knives: reverse or replace if knives are blunt (See “Checking Knife Wear” in “Service” section).
- Check for any loose bolts and missing hardware.
- Check rotor for missing tines. Check tines for wear and replace bolts or bushings as necessary.
- Check that safety shields and curtains are in place and in good condition.
- Lubricate mower-conditioner.
- Clean machine of any foreign objects.
- Check gear cases and cutterbar for any signs of oil leaks.

OUCC006,00007B2-19-13JUN06

Preparing Mower-Conditioner for Field Operation

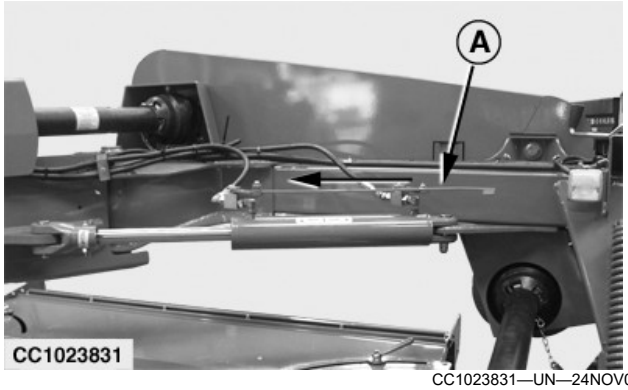

CC1023831—UN—24NOV03

A—Transport lock lever

1. Push transport lock lever (A) toward tongue to open swing cylinder ports.

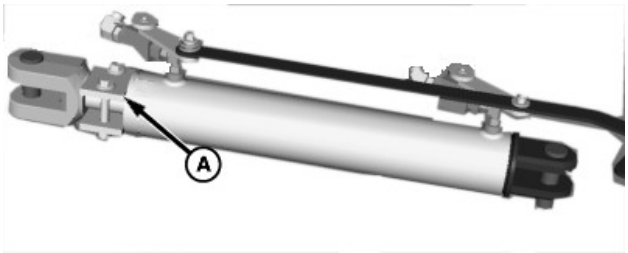

E53555—UN—02AUG04

A—Limiter Block

NOTE: 830 Mower-Conditioner uses a limiter block on cylinder rod to limit cylinder travel.

2. Activate tongue swing circuit to move mower-conditioner to desired field operating position.
3. Lower platform to the ground.

OUO6085,000076F-19-19AUG08

Raising Curtains

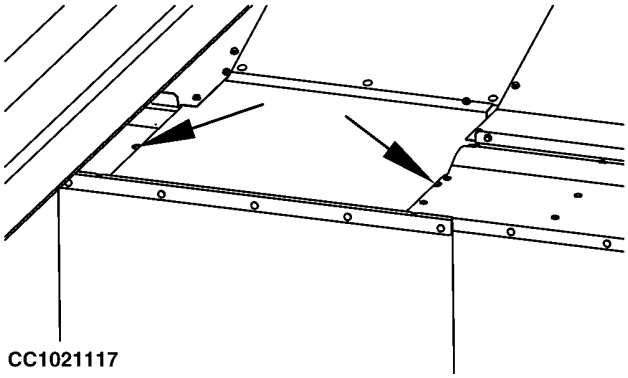

CC1021117—UN—13MAR02

To raise the front safety curtains, place a screwdriver in the front curtain groove, pull it to the side and lift the curtain.

OUCC006,0000A42-19-30MAY06

Lowering Curtains

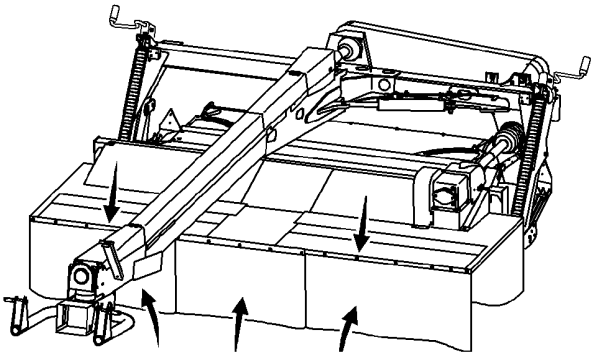

E55157—UN—15MAY07

CAUTION: Always lower doors and curtains before starting mower-conditioner to reduce the potential of thrown objects.

OUO6085,000024F-19-15MAY07

Adjusting Cutting Height

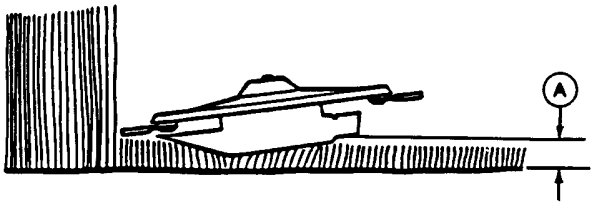

E37233—UN—07JUL93

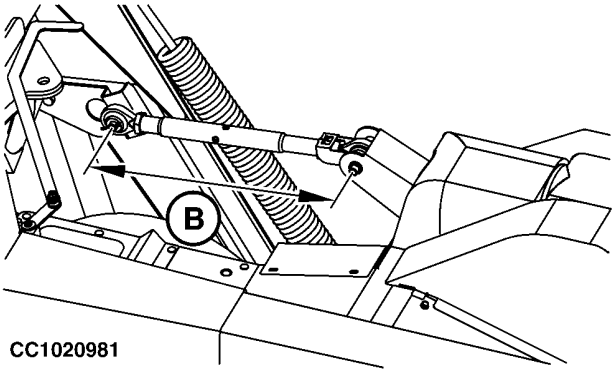

CC1020981—UN—11MAR02

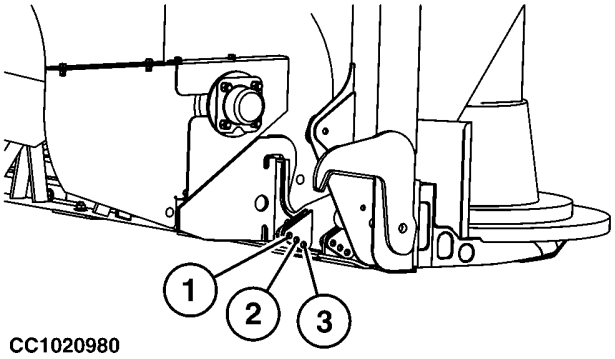

CC1020980—UN—11MAR02

A—Cutting Height
B—Turnbuckle length
1—Position 1
2—Position 2
3—Position 3

The cutting height (A) is determined by the angle of cutterbar and position of side gauge shoes. Select cutting height from chart below, adjust gauge shoes and turnbuckle length (B) as necessary.

NOTE: The information in chart is given for machines on level hard ground.

	Cutting height without gauge shoe spacers	
Gauge shoe position	**Minimum** With turnbuckle length at 615 mm (24.2 in.)	**Maximum** With turnbuckle length at 530 mm (20.9 in.)
1	20 mm (0.8 in.)	55 mm (2.2 in.)
2	20 mm (0.8 in.)	70 mm (2.8 in.)
3	30 mm (1.2 in.)	95 mm (3.7 in.)

	Cutting height with gauge shoe spacers	
Gauge shoe position	**Minimum** With turnbuckle length at 615 mm (24.2 in.)	**Maximum** With turnbuckle length at 530 mm (20.9 in.)
2	60 mm (2.4 in.)	130 mm (5.1 in.)
3	90 mm (3.5 in.)	165 mm (6.5 in.)

- To increase cutting height in each range, shorten tilt control turnbuckle.
- To decrease cutting height in each range, lengthen tilt control turnbuckle.

IMPORTANT: Operating at flatter angles will reduce cutterbar maintenance.

OUO6085,000024A-19-18JUN10

Adjusting Gauge Shoes

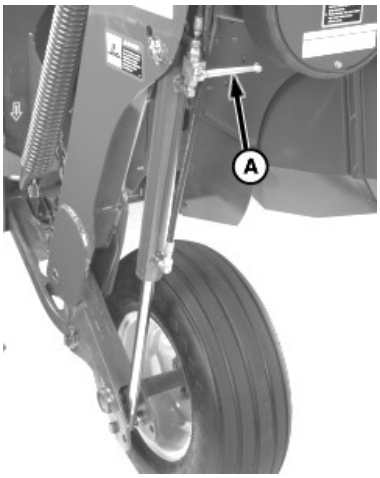

E55154—UN—23MAY07
Handle Shown in Locked Position

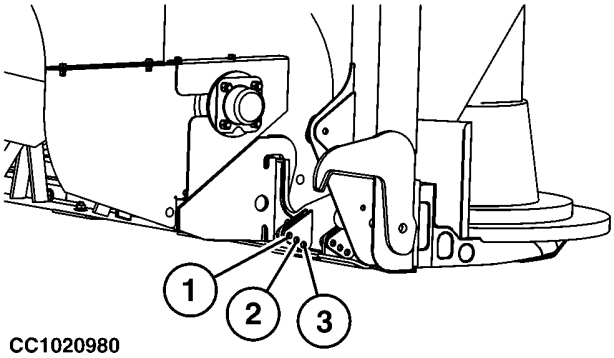

CC1020980—UN—11MAR02

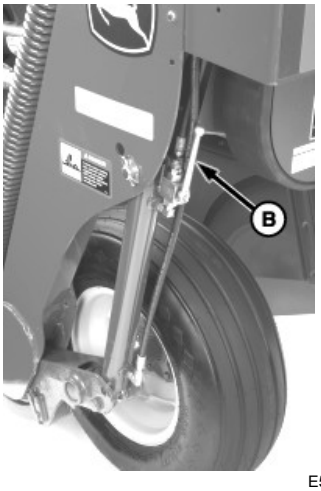

E55155—UN—23MAY07
Handle Shown In Unlocked Position

1. Raise platform using tractor hydraulics.
2. Shut off tractor engine and remove key.
3. Move cylinder lock (A), to locked (horizontal) position.
4. Remove two pins from one side gauge shoe. Position gauge shoe in position 1, 2, or 3.
5. Reinstall pins on gauge shoe.
6. Adjust other gauge shoe in the same position.
7. Move cylinder lock (B), to unlocked (vertical) position.
8. Lower platform using tractor hydraulics.
9. Shot off tractor engine and remove key.

OUO6085,0000747-19-23MAY07

Adjusting Lift Cylinder

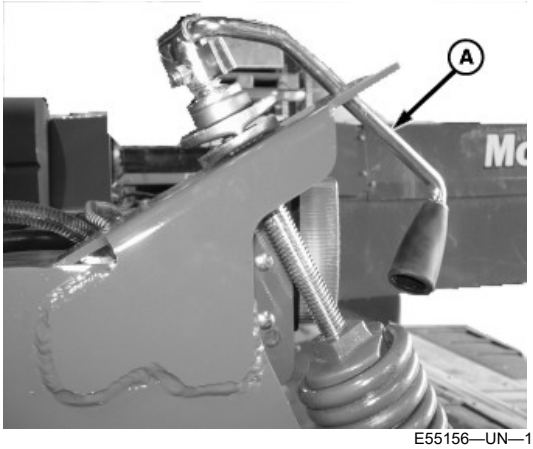

E55156—UN—17MAY07

A—Adjustment Handle

The lift cylinder must be readjusted when gauge shoe spacers are added or removed when setting machine to run in ”high crop” conditions.

To adjust lift cylinder position:

1. Put wooden blocks under each end and along center of cutterbar frame.
2. Lower machine down on blocks.
3. Shut off tractor engine and remove the key.

CAUTION: To avoid personal injury, support float springs before releasing tension completely. Float springs are heavy and may swing away from machine when disconnected.

4. Remove handle (A) from locked position. Turn handle counterclockwise to release float spring tension.
5. Disconnect float springs.
6. Repeat steps 4 and 5 on opposite side.
7. Install floor jack under carrier frame.
8. Raise carrier frame to release tension from lift cylinder.
9. Remove cotter pin.

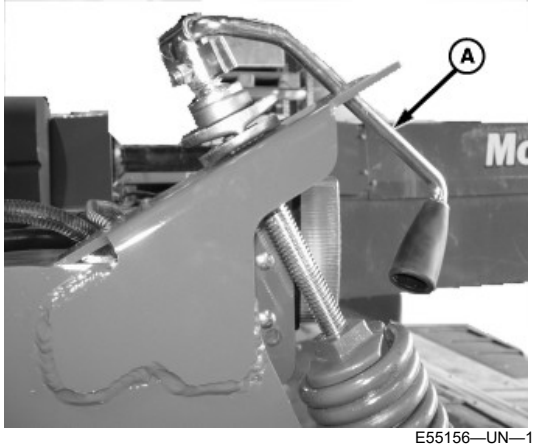

E55156—UN—17MAY07

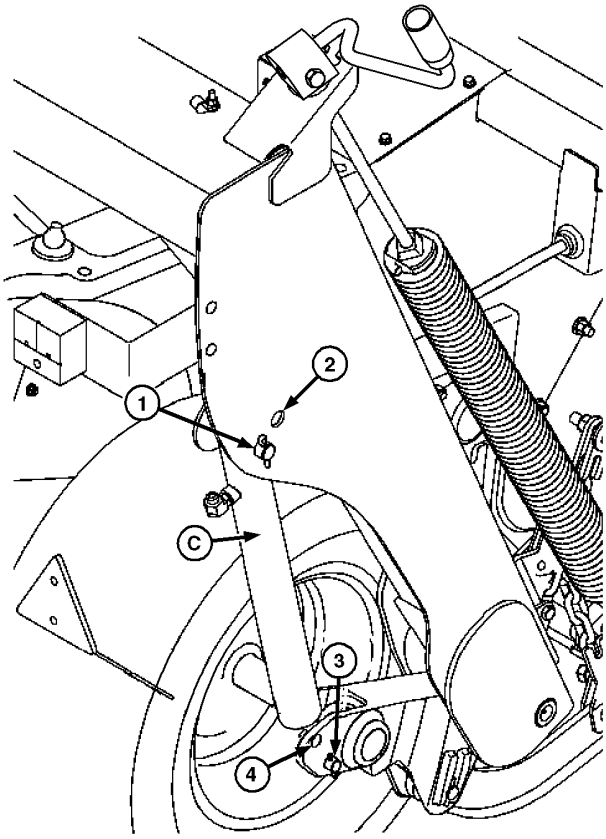

E55158—UN—15MAY07

A—Handle
B—Lift cylinder
1—Position 1
2—Position 2
3—Position 3
4—Position 4

10. Adjust the height of carrier frame to move lift cylinder in new position.

    Use chart to determine lift cylinder position.

NOTE: Position (2) is not used on North American Machines.

	Hole position of cylinder barrel (C)		Hole position of cylinder rod	
Conditions	with 11L15 tire size	with 31/ 13.5-15 tire size	without gauge shoe spacers	with gauge shoe spacers (High Crop Position)
Position	1	1	3	4

11. Install pin. Fasten with cotter pin.
12. Lower carrier frame and remove floor jack.
13. Repeat procedure on opposite side.
14. Connect float springs. Turn adjustment handle (A) clockwise to increase float spring tension. After setting tension, place handle in locked position.

15. Adjust platform float. (See “Adjust Platform Float” in this section.)

OUO6085,0000748-19-05JUN07

Adjusting Platform Float

E55153—UN—18MAY07

A—Adjustment Handle

NOTE: Lighter platform settings and slower ground speed is recommended for rocky or extremely rough conditions.

Use lightest float setting that allows platform to remain firmly on the ground without bouncing. The platform should follow uneven ground without gouging or scraping. An initial starting point should be within specifications at each end of platform.

Specification

Initial Float Setting—Force. . . . . 590—680 N (60—70 kg; 130—150 lb)

1. Remove handle from locked position.
   - Turn handle (A) clockwise to decrease ground pressure
   - Turn handle (A) counterclockwise to increase ground pressure
2. Place handle in locked position
3. Repeat on opposite side.

NOTE: When the shoe position or the turnbuckle length is changed, the platform float must be readjusted.

OUO6085,0000227-19-27JUN07

Opening a New Field

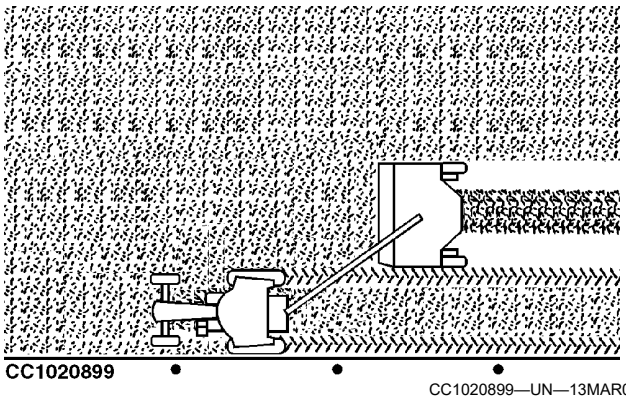

CC1020899—UN—13MAR02

Opening Round

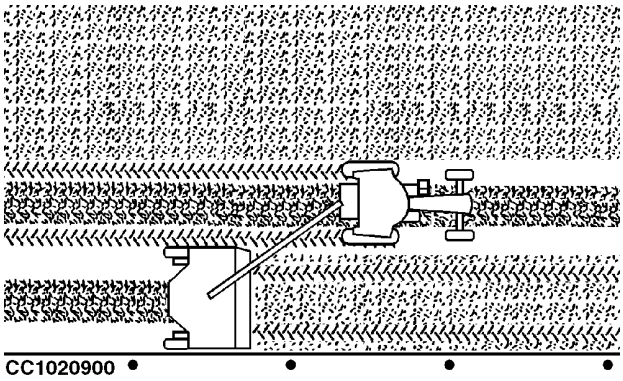

CC1020900—UN—13MAR02

Second Round

The mower-conditioner's swing and platform lift systems are controlled by the tractor's hydraulic systems. (Refer to your tractor operator's manual for operation.)

The cutting platform can be positioned from directly behind the tractor to full left-hand or right-hand operating positions.

When operating in a new field, cut the first round with platform swung either to the left or right. Travel in the opposite direction when coming back to pick up crop laid down by tractor in the opening round.

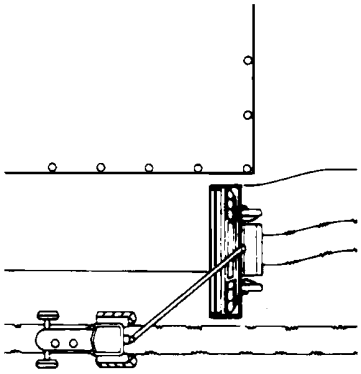

E41397—UN—25FEB97

Steer mower-conditioner around obstacles to minimize tractor steering.

CC03745,00002D1-19-30MAY06

Turning in Field

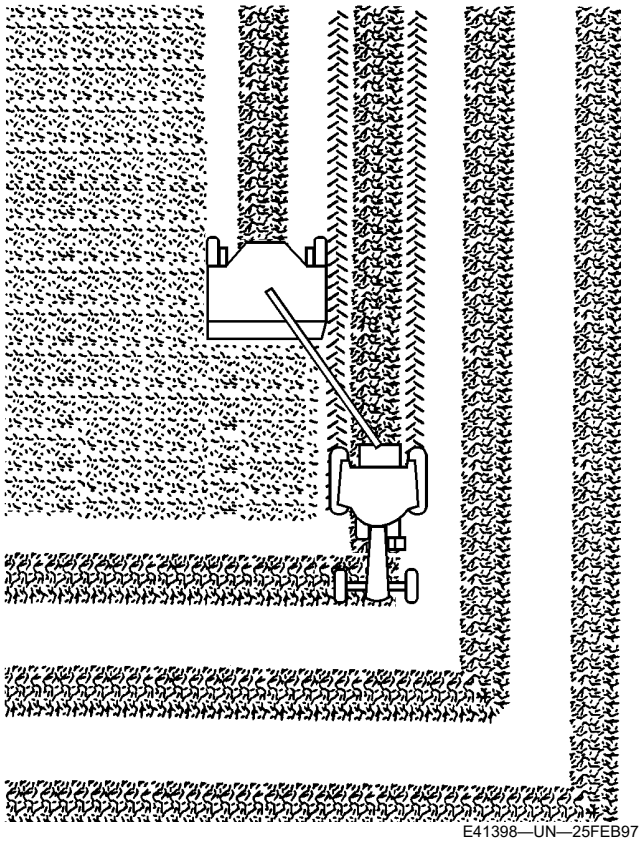

E41398—UN—25FEB97

The swivel hitch allows right-angle and point-row turns without steering the mower-conditioner.

1. Slow down when approaching a sharp turn.

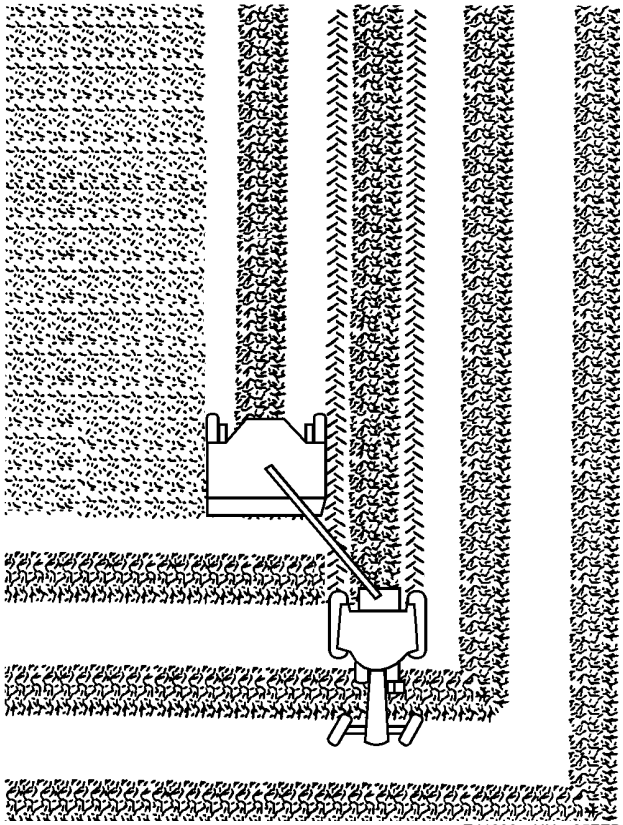

E41399—UN—25FEB97

2. Go past the crop corner until front tractor tires are just past the second windrow.

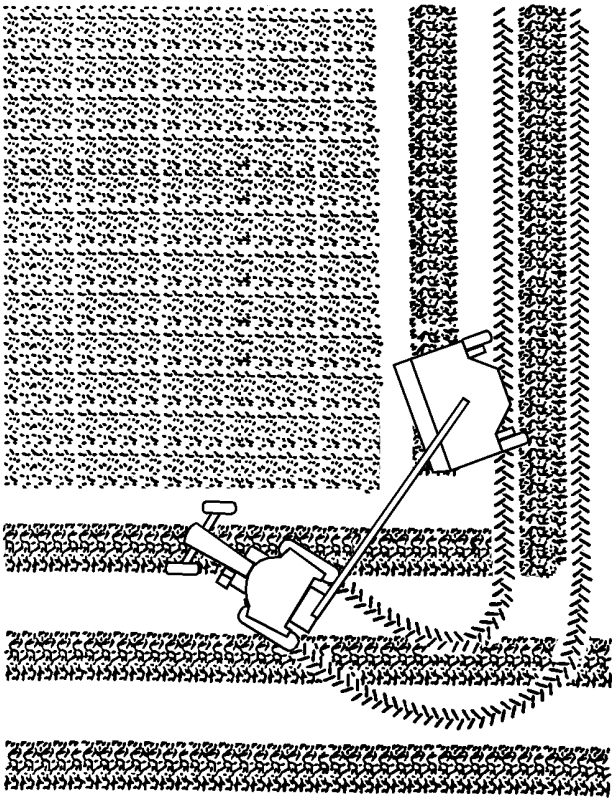

E41555—UN—25FEB97

3. Quickly turn the tractor into the turn until the front tires near the uncut crop.

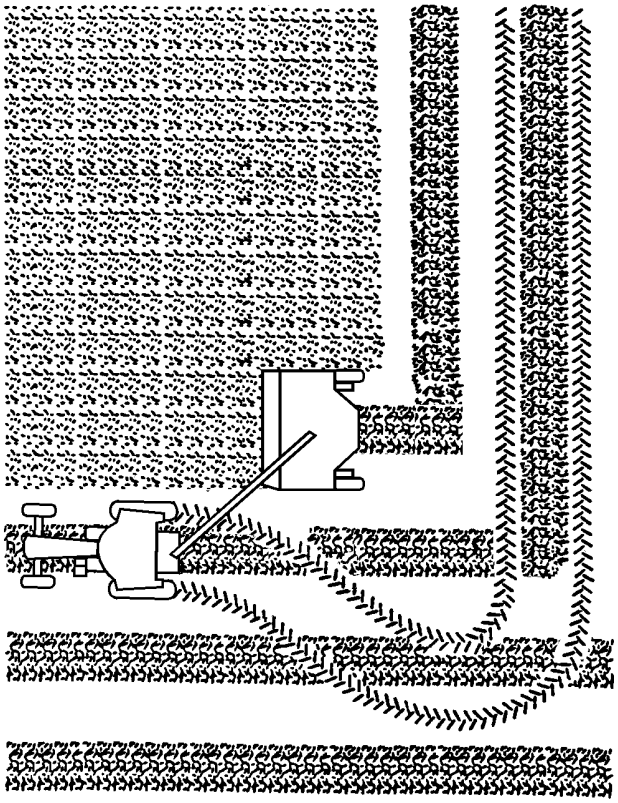

E41556—UN—25FEB97

4. Quickly turn the tractor away from the uncut crop until it is the correct distance from the cut line to resume cutting.

CC03745,0000472-19-30MAY06

Making a Half-turn in Field

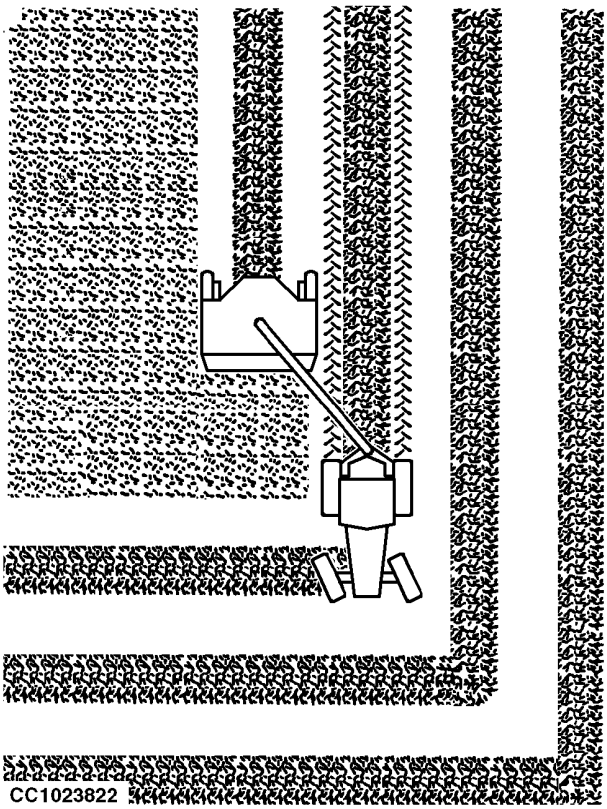

CC1023822—UN—24NOV03

NOTE: Refer to illustrations to make a half-turn.

To make a half-turn, a minimum of four passes around the field is required.

1. Turn on opposite side of uncut crop.

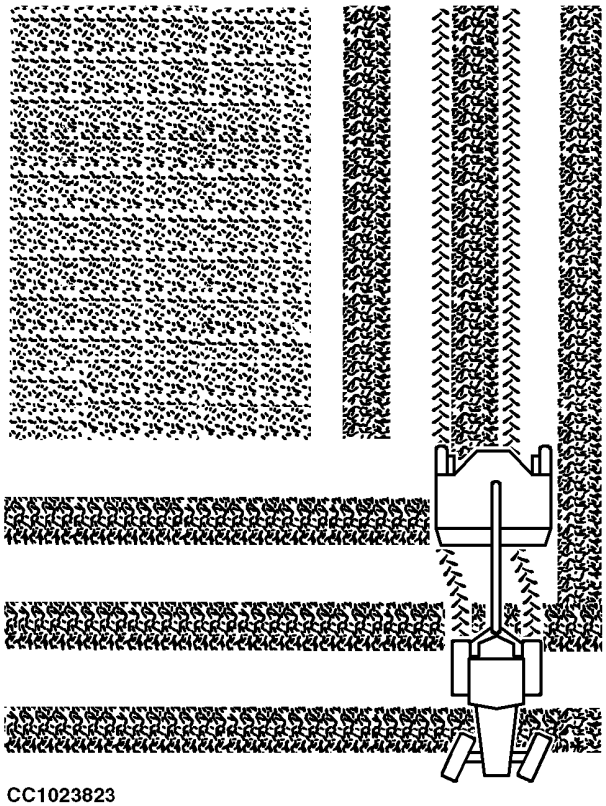

CC1023823—UN—24NOV03

2. Activate tongue swing circuit to center mower-conditioner behind tractor.

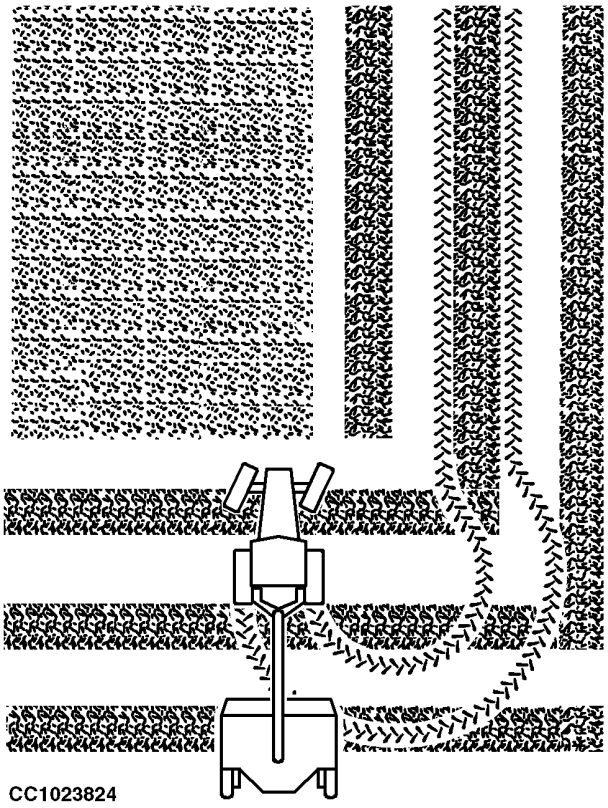

CC1023824—UN—24NOV03

3. Make a half-turn.

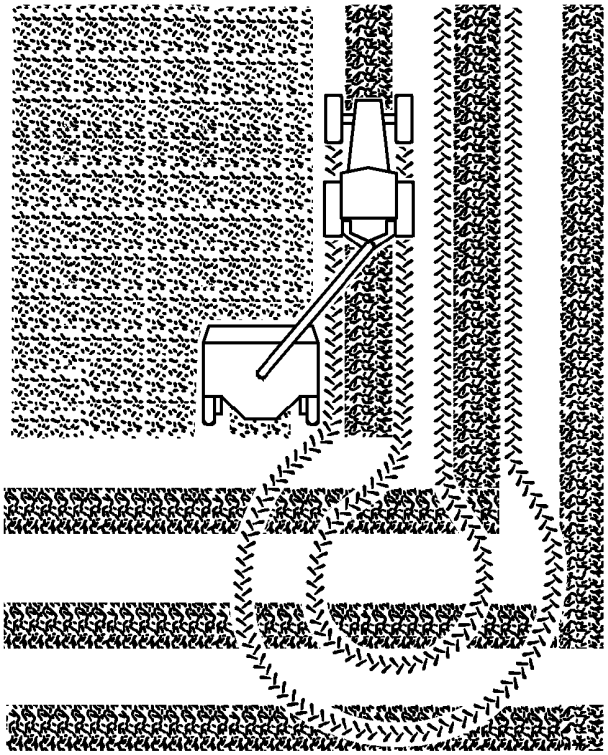

CC1023825—UN—24NOV03

4. Activate tongue swing circuit to move mower-conditioner to desired field operating position.

OUCC006,0000A35-19-20NOV03

Adjusting Windrow Width

Adjusting Windrow Width

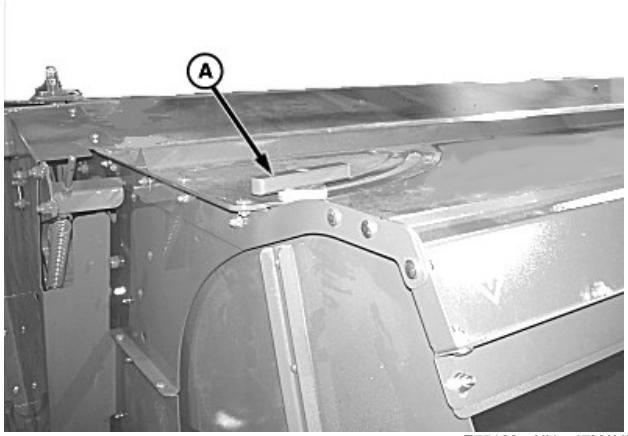

E55169—UN—17MAY07

A—T-Handle

To adjust windrow width:

Loosen handles (A) on each side of machine.

- To reduce windrow width, slide the windrow forming shields towards each other.
- To increase windrow width, slide the windrow forming shields away from each other.

Tighten handles (A).

Adjusting Windrow Width with Wide Swath Kit Installed

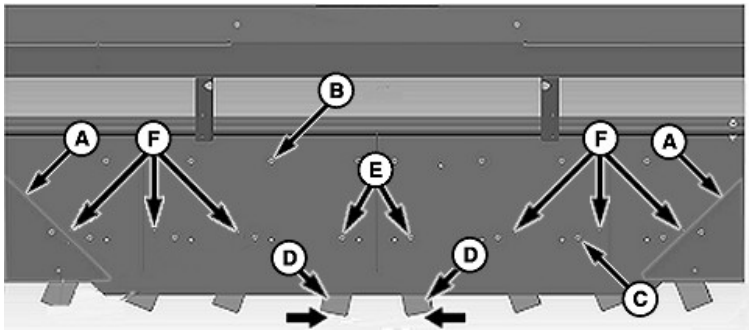

E81555—UN—01AUG16

A—Corner Plate
B—Carriage Bolt (8 used)
C—Carriage Bolt (8 used)
D—Vane
E—Outer Hole
F—Pin Hole

NOTE: The following is the recommended starting spot for vane placement. The vanes are adjustable according to crop conditions.

NOTE: Swathboard is shown with corner plates (A) installed.

NOTE: When removing the forming shields, both roll and impeller machines gain a wider windrow.

With Roll Conditioner:

1. Loosen carriage bolts (B) and (C) on all vanes.
2. Position center two vanes (D) slid all the way inboard with carriage bolt in the outer hole (E). Tighten carriage bolts.
3. Align edges of remaining vanes with pin holes (F) in the swath board. Tighten carriage bolts.

With Impeller Conditioner:

Impeller machines are similar to the roller machines. Impeller machines do not have the center two vanes or corner plates. The center most vanes are slid all the way inboard. The remaining vanes align with the pin holes in the swath board.

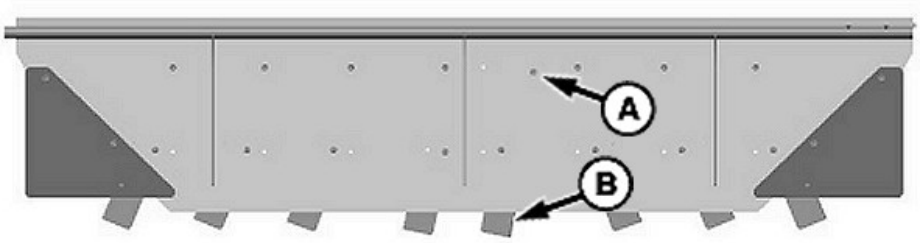

E81637—UN—01SEP16

A—Hole

On 835 roll machines, an extra hole (A) has been added to the swath board to allow vane (B) to be angled towards center of machine. In some crop conditions, a heavy section of windrow is observed to the right of center. The front of the vane (B) can be moved to hole (A) to break up the heavy section of windrow.

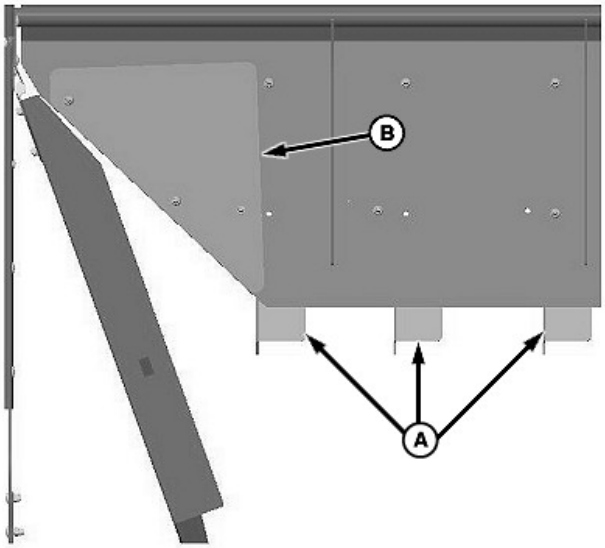

E81638—UN—01SEP16

Vanes and Corner Plate (Left-Hand Side Shown)

B—Vane
A—Outer Vane
B—Corner Plate

To narrow up the windrow with the Wide Swath Kit installed, outer vanes (A) can be angled straight back or removed to slide forming shields in. On roll machines, the corner plates (B) need removed. Corner plates (B) can be stored on top of the swath board as shown when the forming shields are slid in.

GW44282,00006E5-19-28OCT16

Adjusting Swath Board

Adjusting Swath Board

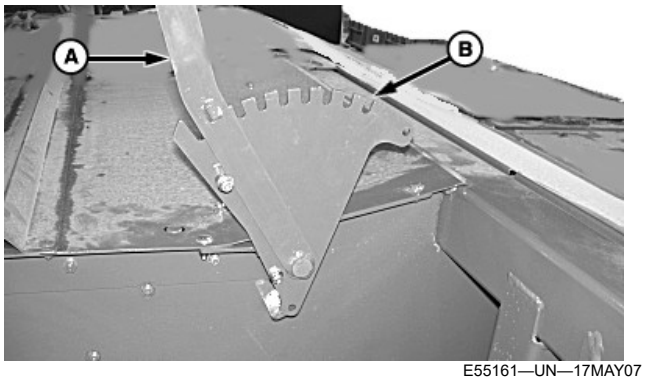

E55161—UN—17MAY07

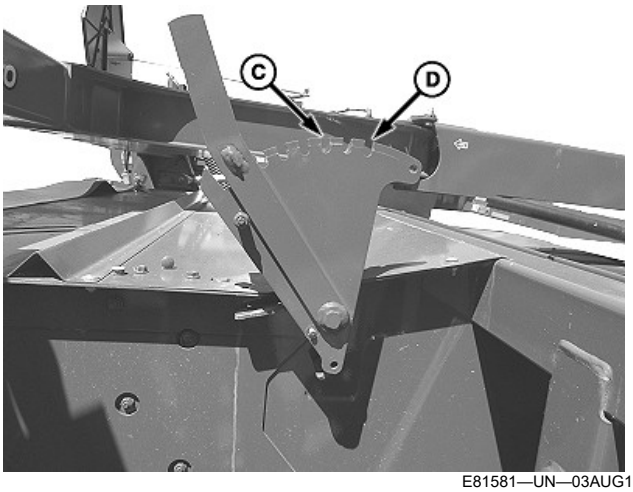

E81581—UN—03AUG16

A—Lever
B—Slot

C—Slot
D—Slot

To adjust width of windrow:

- To increase width, pull lever (A) out and move rearward. Secure in one of slots (B).
- To decrease width, pull lever (A) out and move forward. Secure in one of slots (B).

Swath Board Setting with Wide Swath Kit Installed

- For the roll machine, the recommended setting is the third slot (C) for widest width.
- For the impeller machine, the recommended setting is the first slot (D) for widest width.

GW44282,00006E6-19-28OCT16

Properly Conditioned Crop (Roll Conditioner)

NOTE: Conditioning results may vary depending on the type of crop and crop conditions.

A properly conditioned crop shows a pattern of cracks at regular intervals along the plant stem. The stem looks flat in the cracked locations. Depending on crop height when cut, there are at least two or three cracks along the plant length.

The plant leaves show minimal bruising. Leaf bruising is visible by dark green streaks or marks across the leaf surface. Some leaf bruising cannot be avoided. Too much leaf bruising allows moisture to escape, causing the leaf to dry too quickly and results in loss of the leaf. Loss of the plant leaf reduces feed value of the crop.

GW44282,00006E7-19-26OCT16

Checking Conditioning Effect (Impeller Conditioner)

NOTE: Conditioning results may vary depending on the type of crop and crop conditions.

Conditioning occurs when crop rubs against conditioner hood and against itself. This action disturbs the waxy outer layer of the plant stem and speeds up moisture evaporation.

To check crop conditioning, grab a handful of the crop directly behind the machine after it has been cut and conditioned. When the machine is properly adjusted, the plant stems are fairly limp and fold over your hand. In a random sample, nine out of ten stems show stem cracks. Check the leaves in the same sample. When machine is properly adjusted, no more than 5% of the leaves show bruising.

Three things affect conditioning intensity:

1. Rotor speed:
   - High speed (870 rpm)—Ideal for most crops
   - Low speed (630 rpm)—For tender crops or if leaf loss occurs on faster speed
2. Clearance between the conditioning hood and rotor tine tips. Maximum clearance reduces conditioning intensity and is a good starting point for legume crops.
3. Crop volume passing between the rotor and the hood. The more volume, the greater the conditioning intensity. Crop volume can be affected by changing ground speeds. Faster ground speed requires the clearance between the rotor and conditioning hood be increased.

   To check the conditioning effect:

   1. Adjust mower-conditioner to crop requirements for grass or legumes.
   2. Cut a pass through the field at normal ground speed with the tractor engine operating at rated PTO rpm.
   3. Stop and check crop for conditioning effect. Overconditioning causes the leaves to dry faster and break off before stems are dry. Overconditioning also increases horsepower requirements and causes components to wear faster.

   Grass Crops: The heads are not separated from the stems. The stems show impact and rubbing marks but are not slashed.

   Mixed Grass, Clover, or Alfalfa: Blossoms and leaves are not lost or scattered. The blossoms, leaves, and stems show impact and rubbing marks.

GW44282,00006E8-19-26OCT16

Adjusting Conditioning Intensity

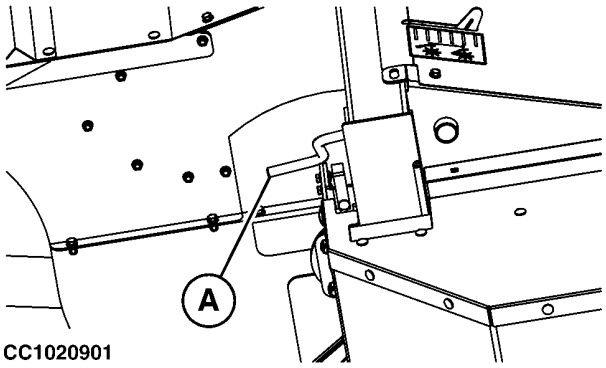

CC1020901—UN—11MAR02

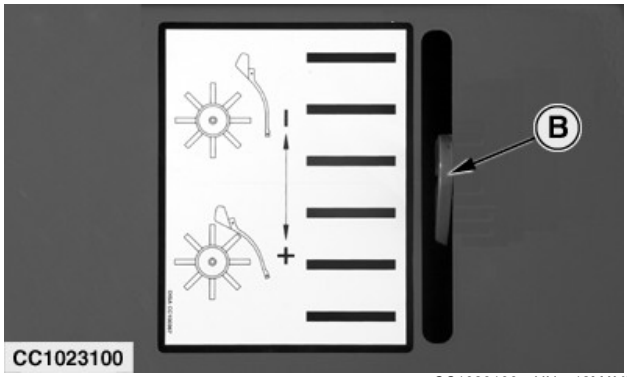

CC1023100—UN—12MAY03

A—Crank
B—Indicator

CAUTION: Disengage PTO, shut off tractor engine and remove key before making adjustment.

IMPORTANT: Determine the correct clearance between conditioning hood and tine tips to provide the best conditioning effect for crop, and prevent crop plugging at front of conditioning hood.

NOTE: Clearance between tine tips and conditioning hood has a slight effect on windrow width.

Turn crank (A) to adjust conditioning hood.

- Turn crank clockwise to increase conditioning effect.
- Turn crank counterclockwise to decrease conditioning effect.

Conditioning effect can also be changed by modifying rotor speed (see ”Changing Impeller Rotor Speed” in this section).

OUO6085,000024B-19-13JUN06

Changing Impeller Rotor Speed

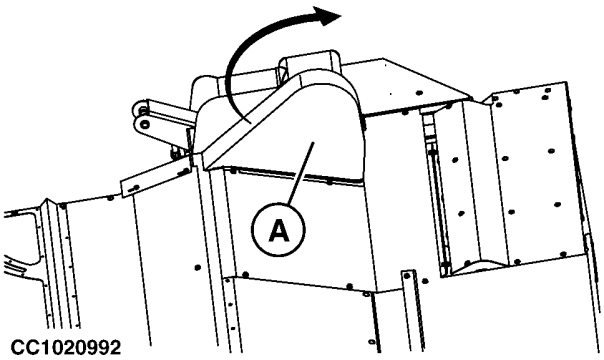

CC1020992—UN—11MAR02

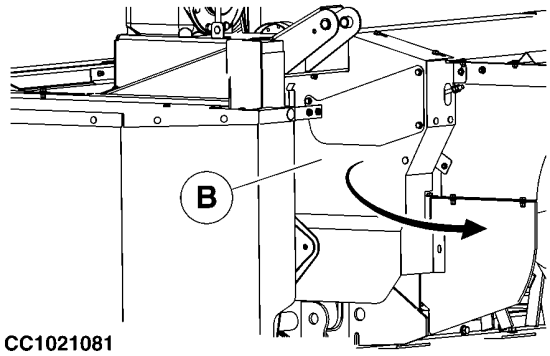

CC1021081—UN—11MAR02

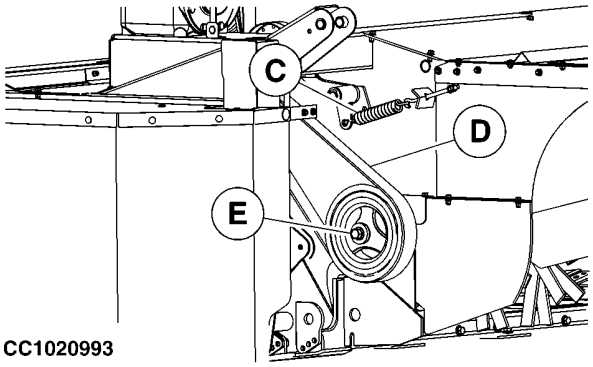

CC1020993—UN—11MAR02

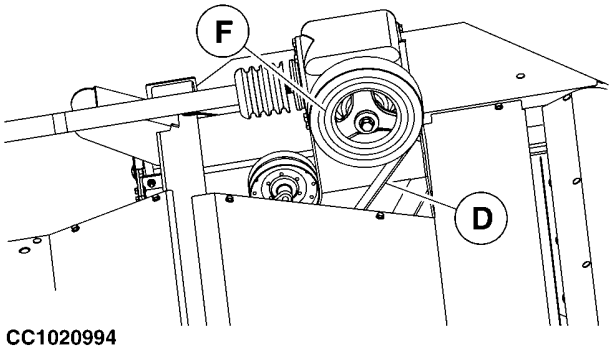

CC1020994—UN—11MAR02

A—Guard
B—Guard
C—Tightening spring
D—Drive belt
E—Impeller rotor sheave
F—Gear case sheave

Conditioning intensity can be adjusted by changing the impeller rotor speed. Two rotor speeds are available, depending on position of drive sheaves (E and F):

- 870 rpm with small sheave on impeller rotor and large sheave on main gear case (factory setting).
- 630 rpm with large sheave on impeller rotor and small sheave on main gear case.

1. Remove guard (A) and guard (B).
2. Release tension on tightening spring (C).
3. Remove impeller rotor drive belt (D).
4. Remove impeller rotor sheave (E).
5. Remove cutterbar input drive gear case sheave (F).

6. Install sheave (E) removed from impeller rotor on cutterbar input drive gear case. Install washer and cap screw. Tighten cap screw to specified torque.
7. Install sheave (F) removed from cutterbar input drive gear case on impeller rotor. Install washer and cap screw. Tighten cap screw to specified torque.

Specification

Cap Screw—Torque. . . . . 340 N·m (250 lb-ft)

8. Install conditioner drive belt (D).

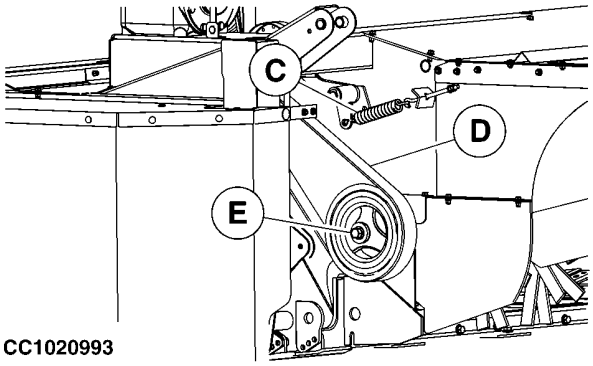

CC1020993—UN—11MAR02

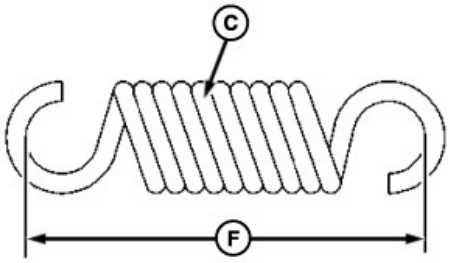

E55256—UN—05JUN07

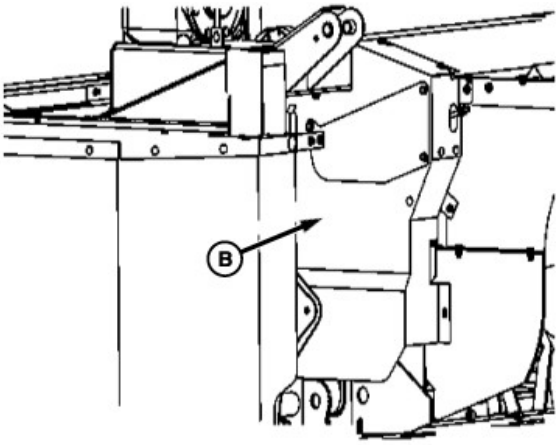

E53694—UN—22SEP04

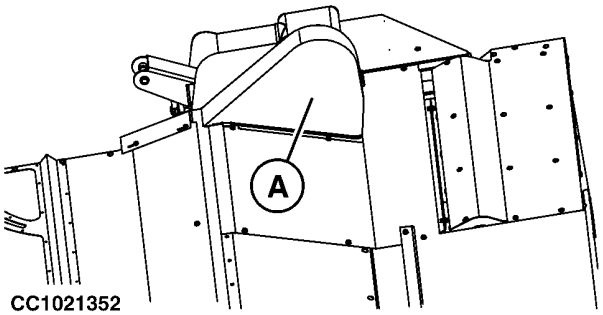

CC1021352—UN—15MAR02

A—Guard
B—Guard
C—Tightening spring
D—Drive belt
E—Impeller rotor sheave
F—Spring length

9. Set belt tightening spring (C) to 233 mm (9.2 in.) (F) between hooks.
10. Install guards (A and B).

OUO6085,0000246-19-05JUN07

Adjusting Roll Pressure (Machines Beginning with Serial No. 371801—)

Optimum conditioning for legume-type crops, such as alfalfa and clover, occurs when 90% of the stems show some conditioning. Stems are crimped with minimum leaf damage.

Too much roll pressure causes overconditioning of the crop. Overconditioning causes the leaves to dry faster and break off before the stems are dry. Also, overconditioning requires more horsepower and causes components to wear faster.

Check roll pressure:

Cut a swath through the field at normal ground speed with the tractor engine operating at rated PTO speed. Stop and check the conditioning effect on the crop. A properly conditioned crop shows stems that are crimped, slightly crushed, with leaves that are still intact and not bruised.

To adjust:

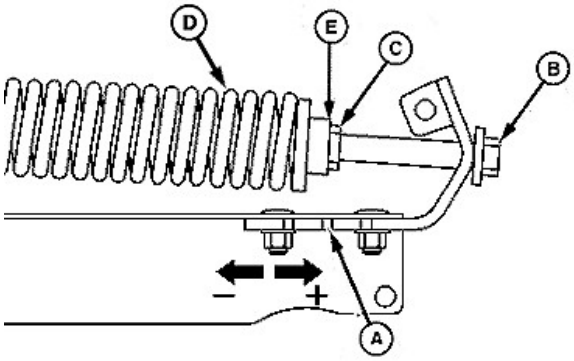

E81584—UN—11AUG16

A—Notch (roll pressure indicator)

B—Cap Screw
C—Lock Nut
D—Spring
E—Spring End

1. Park machine on a level surface.
2. Lower platform and carrier frame completely.
3. Raise the front doors.
4. Loosen lock nut (C).
5. Turn cap screw (B) to adjust roll pressure:
   - Turn cap screw clockwise to increase roll pressure.
   - Turn cap screw counterclockwise to decrease roll pressure.
6. Align spring end (E) with one of three notches (A).

NOTE: Factory setting is the middle notch.

7. Stop turning cap screw (B) and tighten lock nut (C).

IMPORTANT: Adjustment must be the same on both sides.

8. Repeat procedure on the opposite side of the machine with same adjustment.

GW44282,00006E9-19-28OCT16

Adjusting Roll Spacing

Adjust Roll Spacing

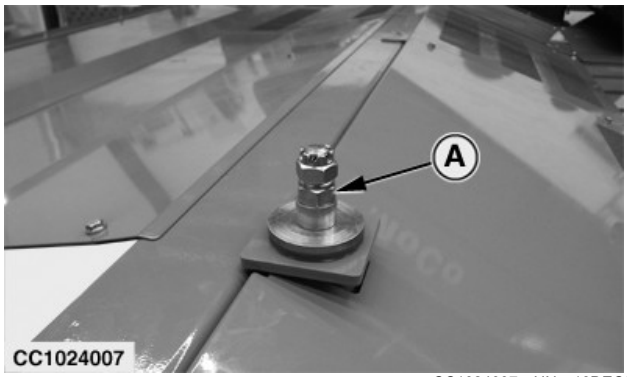

CC1024007—UN—18DEC03

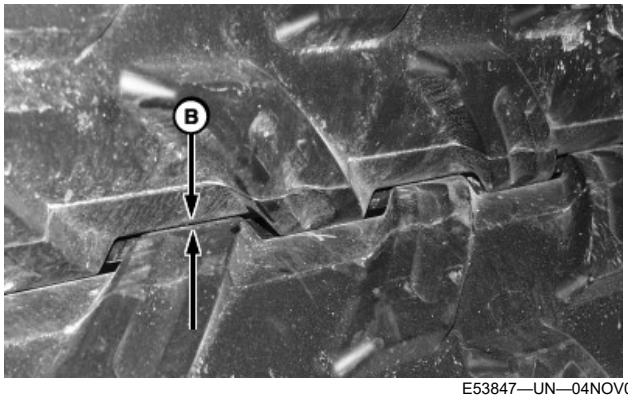

E53847—UN—04NOV04

A—Adjusting Nut
B—Dimension Between Rolls, 6—12 mm (0.236—0.471 in)

Minimum roll spacing fits for most crops. Spacing can be increased for the improved feeding of heavy, thick-stemmed cane-type crops.

IMPORTANT: DO NOT move the top castellated nut. Nut is factory installed to maintain minimum clearance between rolls. If the top nut is adjusted or removed, serious damage to machine occurs.

To prevent the rolls from hitting and causing excessive wear and machine damage, keep conditioning rolls clean and free from buildup.

1. Park machine on a level surface.
2. Lower platform and carrier frame completely.
3. Turn adjusting nut (A) clockwise until a desired gap between rolls (B) is reached within specifications.

Specification	
Roll Spacing—Distance	6—12 mm (0.236—0.471 in)

4. Repeat procedure on the opposite side.
5. To return to recommended roll spacing for most crops, turn adjusting nut counterclockwise until it stops.

Normal Wear Adjustment

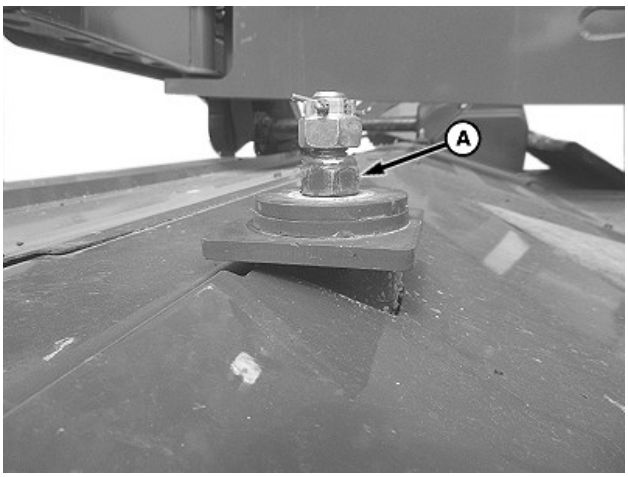

E81582—UN—04AUG16

A—Lock Nut

To compensate for normal wear or if rolls are replaced, set minimum roll spacing by the following procedure.

CAUTION: To avoid bodily injury while performing this adjustment:

- **Keep all shields in place.**
- **Keep hands and clothing away from moving parts.**

IMPORTANT: Never allow adjusted rolls to contact during use or damage to machine occurs.

1. Engage machine drive at lowest engine speed.
2. Turn lock nut (A) counterclockwise in 1/4 increments until roll contact causes vibration and rumbling noise.
3. Turn lock nut (A) clockwise in 1/4 increments until vibration and rumbling noise stops.
4. When vibration and rumbling noise stops, turn lock nut (A) an additional 1/2 turn clockwise.
5. Repeat steps 1-4 for the opposite side of machine.
6. Repeat steps 1-4 again on the initial side of machine.

GW44282,00006EA-19-28OCT16

1000 RPM Rotor Speed

NOTE: For correct parts to change rotor speed, contact your John Deere dealer .

The 1000 rpm rotor speed parts should only be used in adverse conditions, due to increased tractor power requirements.

NOTE: Due to increased tractor power requirement when using the 1000 rpm rotor speed, the use of these parts should be limited to conditions where it is necessary.

OUO6085,0000354-19-05JUN07

Gauge Shoe Extensions

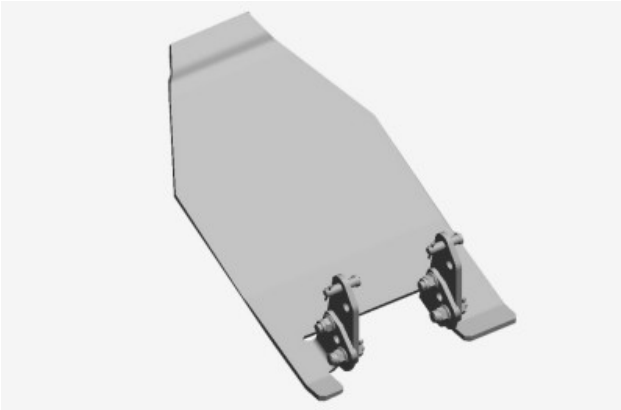

E55371—UN—25JUL07

NOTE: For parts, contact your John Deere Dealer.

Gauge shoe extensions will allow an increase in cutting height.

OUO6085,0000355-19-01AUG07

Wrench (E83373)

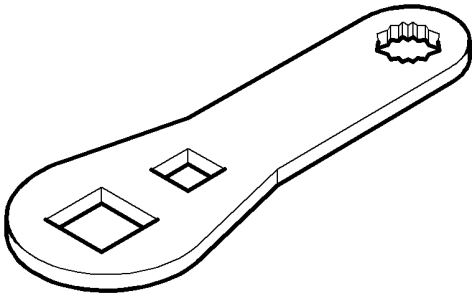

CC1023296

CC1023296—UN—03SEP03

This tool is used to loosen roll driveline cap screw (see “Synchronizing Rolls” in Service section).

OUO6085,000074A-19-15MAY07

Hydraulic Tilt Control

Hydraulic cutterbar angle adjustment enables operator to adjust cutting angle “on-the-go” to match changing ground or field conditions.

NOTE: Operates on mower-conditioner lift circuit. (Requires two selective control valves.)

OUO6085,0000357-19-03JUN08

Drawbar Shield

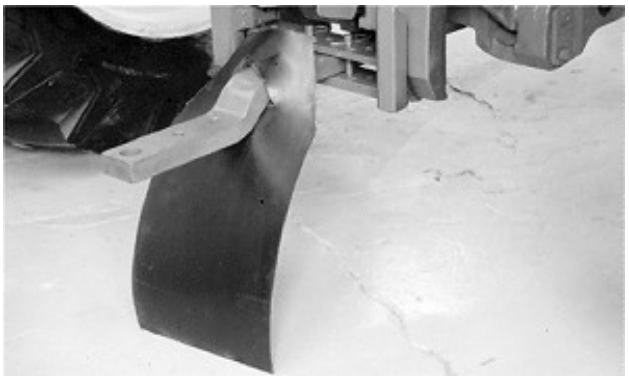

E26072—UN—12SEP88

Helps prevent buildup of crop that can occur around drawbar and front of tongue.

OUO6085,0000359-19-14JUN06

Wide Swath Kit

A wide swath kit is used to produce a wider windrow of the crop for faster dry down.

GW44282,00006EC-19-03OCT16

Lubricating and Maintaining Machine Safely

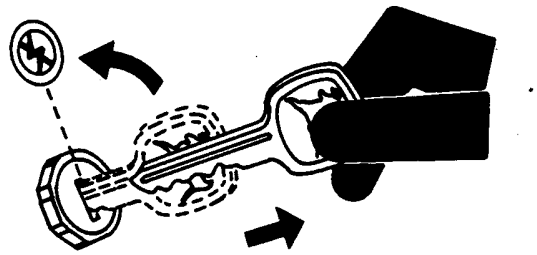

TS230—UN—24MAY89

CAUTION: To help prevent personal injury caused by unexpected movement, be sure to service machine on a level surface.

Do not lubricate or maintain the machine while it is in motion.

If machine is connected to tractor, engage tractor parking brake, place transmission in "Park", shut off engine and remove key.

If machine is detached from tractor, block wheels to prevent movement.

CC03745,00005D7-19-21JUN12

Observe Service Intervals

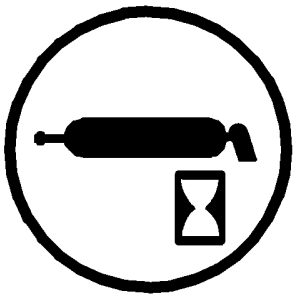

CC 000934

CC000934—UN—05APR95

Using tractor hour meter as a guide, perform services at the hourly intervals indicated on following pages.

IMPORTANT: The maintenance intervals recommended are based on normal conditions; severe or unusual conditions may require more frequent lubrication.

OUCC006,00002CB-19-13DEC00

Grease

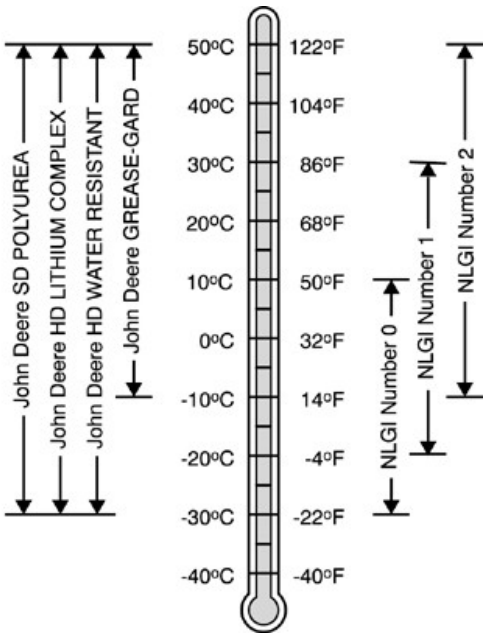

TS1673—UN—31OCT03

Use grease based on NLGI consistency numbers and the expected air temperature range during the service interval.

John Deere SD POLYUREA GREASE is preferred.

The following greases are also recommended

- John Deere HD LITHIUM COMPLEX GREASE
- John Deere HD WATER RESISTANT GREASE
- John Deere GREASE-GARD™

Other greases may be used if they meet the following:

NLGI Performance Classification GC-LB

IMPORTANT: Some types of grease thickeners are not compatible with others. Consult your grease supplier before mixing different types of grease

NOTE: Moly grease is not recommended for U-joint crosses. Use SD Polyurea grease in U-joint crosses under high load conditions.

OUO6085,00001C1-19-24JUN04

GREASE-GARD is a trademark of Deere & Company

Cutterbar and Roll Drive Gear Case Oil

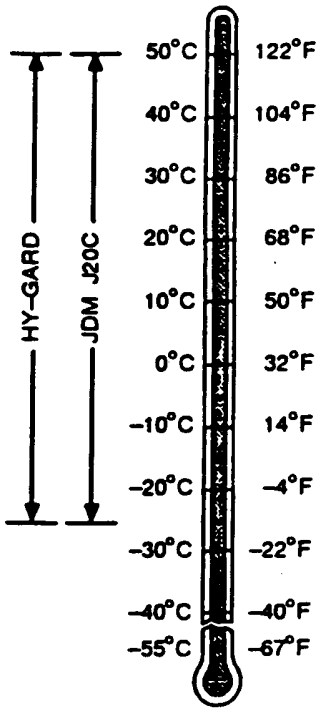

E37277—UN—30SEP93

Use oil viscosity based on the expected air temperature range during the period between oil changes.

John Deere HY-GARD ® oil is recommended.

Other oils may be used if they meet the John Deere Standard JDM J20C.

John Deere Low Viscosity HY-GARD® and BIO-HY-GARD™ oils are NOT recommended.

EX,945IN,T-19-27JUN07

HY-GARD is a registered trademark of Deere & Company.
BIO-HY-GARD is a trademark of Deere & Company

Swivel Gear Case Oil

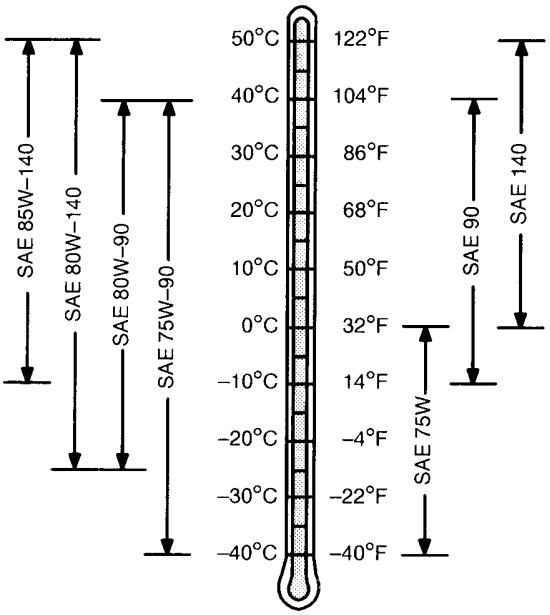

TS1653—UN—14MAR96

Use oil viscosity based on the expected air temperature range during the period between oil changes.

John Deere GL-5 GEAR LUBRICANT is recommended.

Other oils may be used if they meet API Service Classification GL-5.

CC03745,0000474-19-18JUL06

Alternative and Synthetic Lubricants

Conditions in certain geographical areas may require lubricant recommendations different from those printed in this manual.

Some John Deere brand coolants and lubricants may not be available in your location.

Consult your John Deere dealer to obtain information and recommendations.

Synthetic lubricants may be used if they meet the performance requirements as shown in this manual.

The temperature limits and service intervals shown in this manual apply to John Deere branded fluids or fluids that have been tested and/or approved for use in John Deere equipment.

Re-refined base stock products may be used if the finished lubricant meets the performance requirements.

DX,ALTER-19-13JAN18

Mixing of Lubricants

In general, avoid mixing different brands or types of oil. Oil manufacturers blend additives in their oils to meet certain specifications and performance requirements.

Mixing different oils can interfere with the proper functioning of these additives and degrade lubricant performance.

Consult your John Deere dealer to obtain specific information and recommendations.

DX,LUBMIX-19-18MAR96

Lubricant Storage

Your equipment can operate at top efficiency only when clean lubricants are used.

Use clean containers to handle all lubricants.

Store lubricants and containers in an area protected from dust, moisture, and other contamination. Store containers on their side to avoid water and dirt accumulation.

Make certain that all containers are properly marked to identify their contents.

Properly dispose of all old containers and any residual lubricant they may contain.

DX,LUBST-19-11APR11

Perform Lubrication and Maintenance

Clean lubrication fittings before using grease gun. Replace any lost or broken fittings immediately. If a new fitting fails to take grease, remove and check for failure of adjoining parts.

IMPORTANT: Extend machine fully to left of tractor and lower platform to ground to allow access to all lubrication fittings.

OUO6085,000077A-19-30MAY07

As Required - Float Spring Bolts

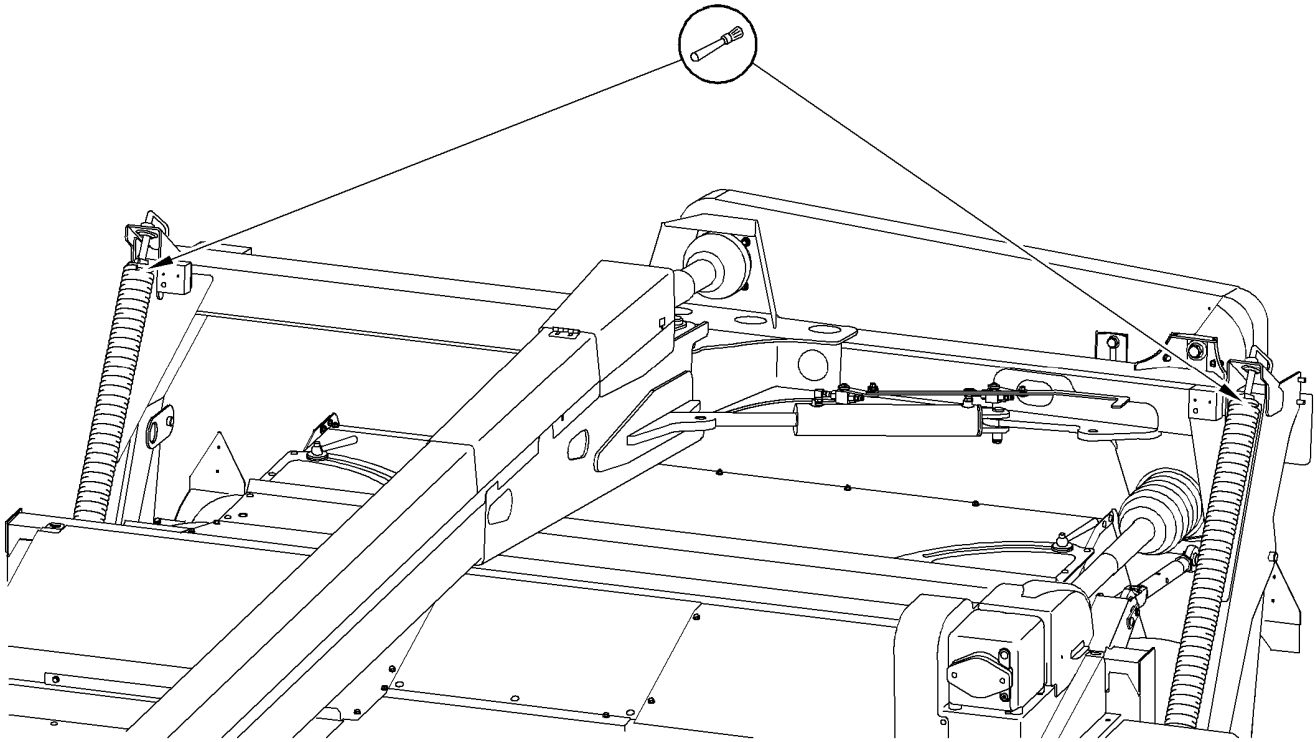

E55097—UN—04MAY07

Lubricate threads of float spring bolts on both sides with John Deere SD POLYUREA GREASE.

OUO6085,00001F7-19-03AUG07

Every 10 Hours - Primary Driveline

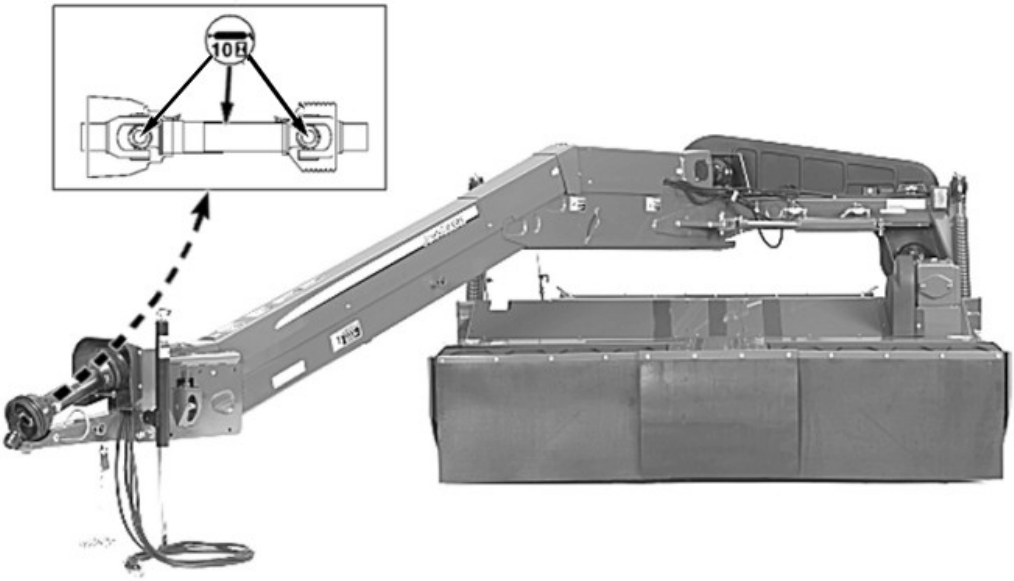

E55558—UN—13NOV07

NOTE: Equal angle driveline must be fully collapsed to grease.

Lubricate with John Deere SD POLYUREA GREASE.

OUO6085,0000761-19-13NOV07

Every 10 Hours - Overrunning Coupler

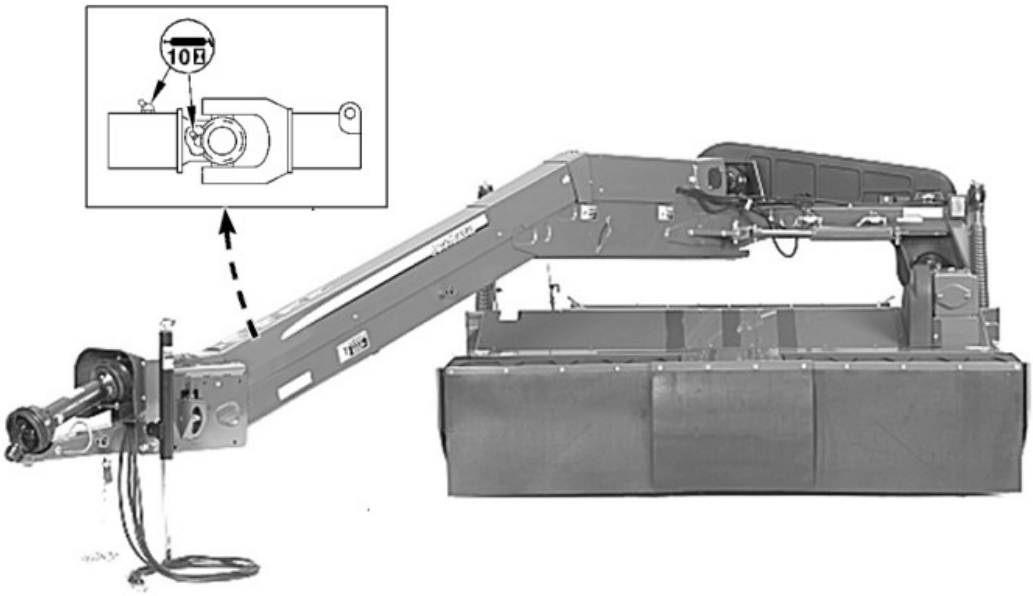

E55172—UN—18MAY07

Overrunning coupler is located at front of tongue. Unlatch and open tongue front cover to access.

Manually rotate driveline, as necessary, to access fittings. Lubricate overrunning coupler fitting and overrunning coupler joint cross fitting with John Deere SD POLYUREA GREASE.

OUO6085,0000762-19-03AUG07

Every 10 Hours - Tongue Rear Joint Cross

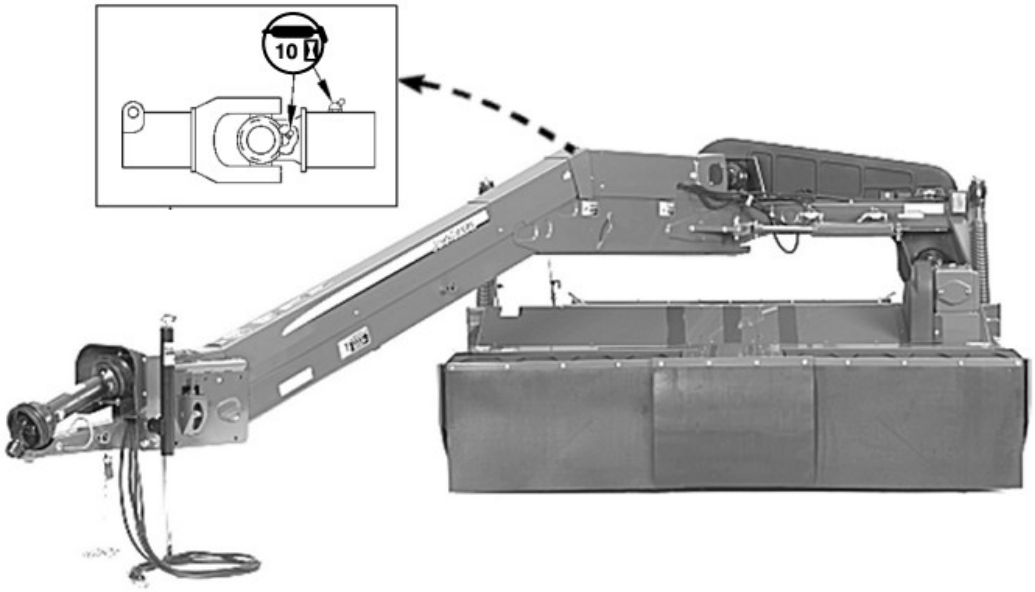

E55379—UN—08AUG07

Tongue rear cross is located at rear of tongue. Unlatch and open tongue rear cover to access.

Manually rotate driveline, as necessary, to access fittings. Lubricate tongue rear joint cross with John Deere SD POLYUREA GREASE.

OUO6085,0000763-19-08AUG07

Every 10 Hours - Tongue Pivot Driveline

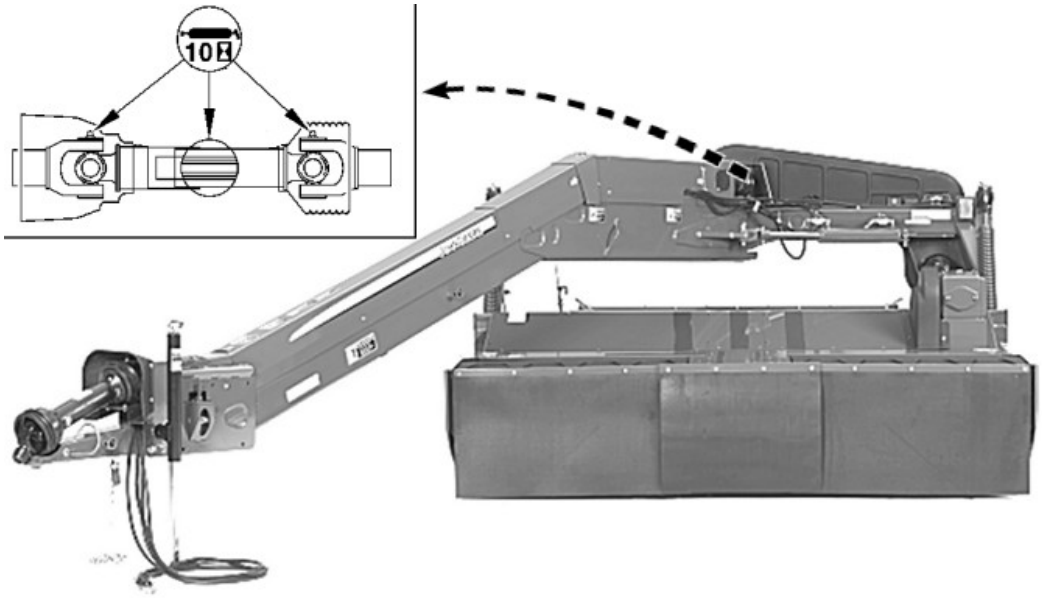

E55174—UN—18MAY07

Tongue pivot driveline is located at rear of tongue. Unlatch and open tongue rear cover to access (Swivel tongue only).

Manually rotate driveline, as necessary, to access fittings. Lubricate tongue pivot driveline with John Deere SD POLYUREA GREASE.

OUO6085,0000764-19-03AUG07

Every 10 Hours - Tongue Pivot

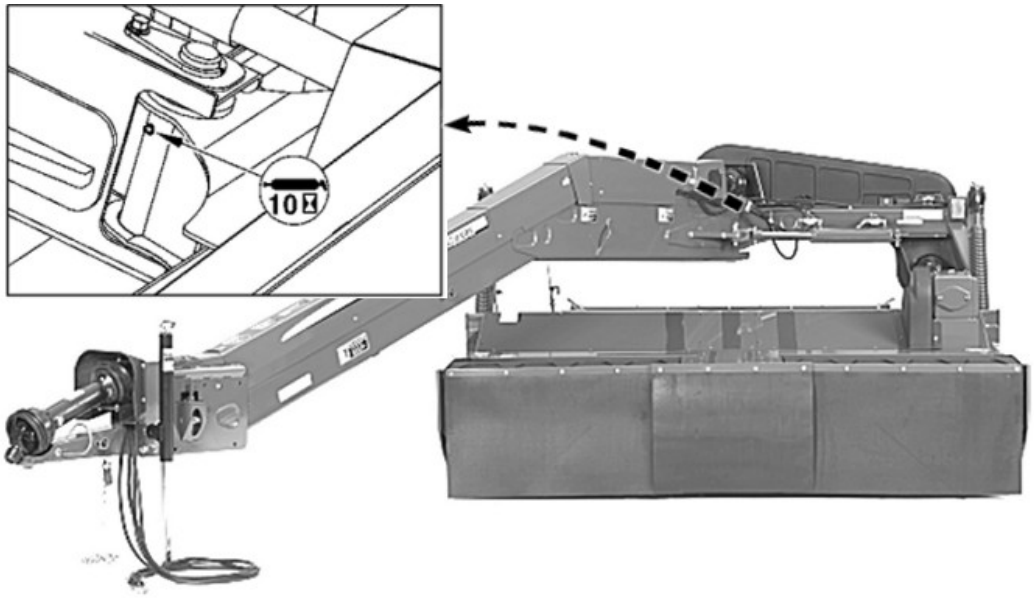

E55175—UN—18MAY07

Lubricate tongue pivot with John Deere SD POLYUREA GREASE.

OUO6085,0000765-19-03AUG07

Every 10 Hours - Platform Driveline

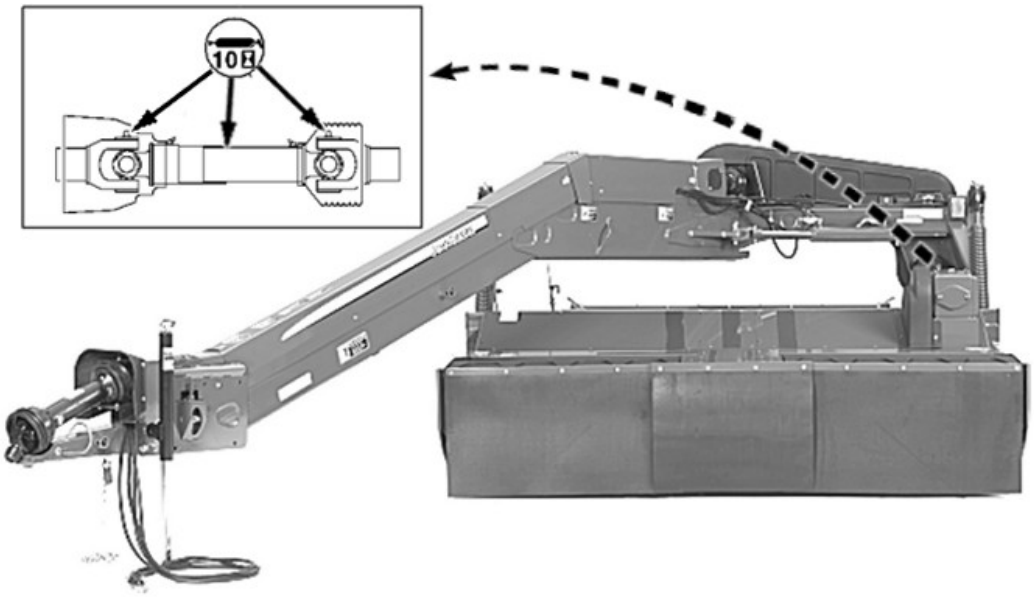

E55176—UN—18MAY07

Lubricate platform driveline with John Deere SD POLYUREA GREASE.

Open access cover on top of gearcase shield to access front fitting(s).

OUO6085,0000766-19-03AUG07

Every 10 Hours - Cutterbar

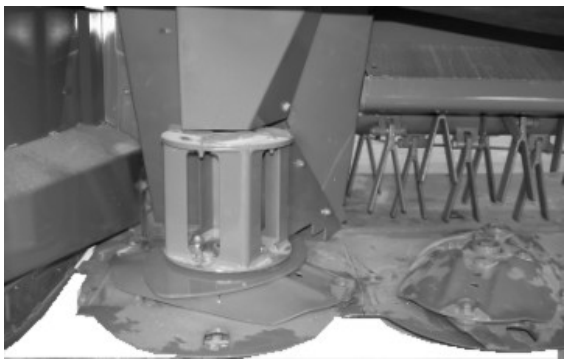

E55163—UN—17MAY07

Clean crop material, dirt, mud and debris from around cutterbar every 10 hours. Buildup of debris can cause excessive wear on cutting components.

OUO6085,000074E-19-15MAY07

Every 10 Hours - Cutterbar Driveline

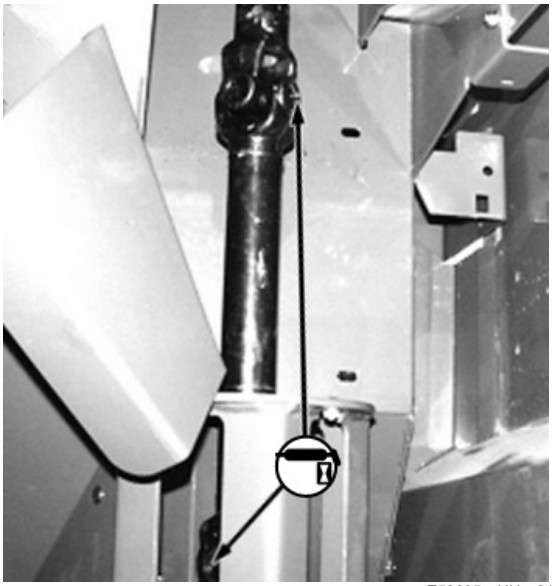

E53695—UN—21SEP04

Raise left-hand side curtain to access driveline (see ”Raising Curtains” in ”Operating the Mower-Conditioner” section).

Lubricate cutterbar driveline upper and lower grease nipple with John Deere SD POLYUREA GREASE.

OUO6085,000022B-19-03AUG07

Every 10 Hours - Wheel arm Pivots (Left-Hand and Right-Hand Side)

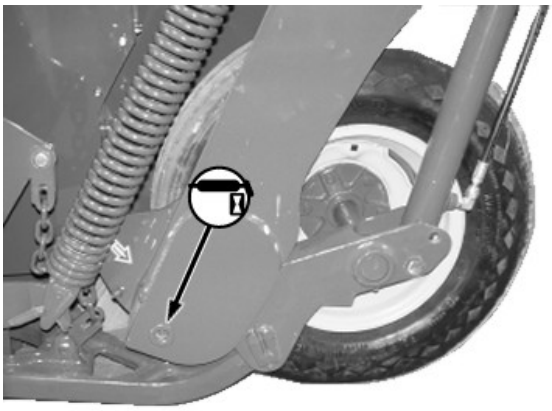

E55164—UN—17MAY07

Lubricate with John Deere SD POLYUREA GREASE.

OUO6085,00001D6-19-03AUG07

Every 10 Hours - Left-Hand Float Link Pivots

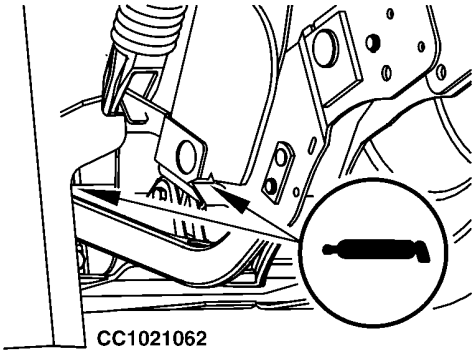

CC1021062—UN—11MAR02

Lubricate with John Deere SD POLYUREA GREASE (two grease nipples).

OUO6085,000022C-19-03AUG07

Every 10 Hours - Roll Pivots (Roll Conditioner)

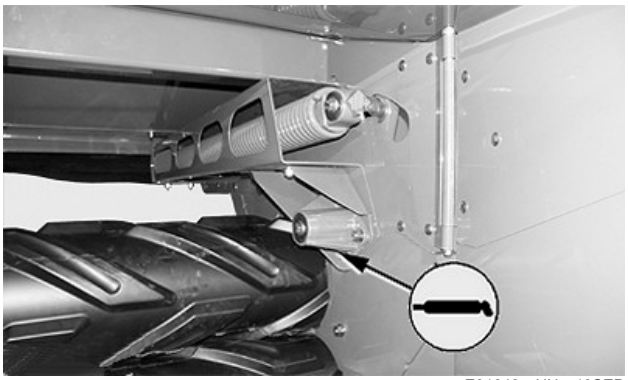

E81642—UN—13SEP16

1. Raise machine using tractor hydraulics. Apply handbrake, place transmission in park, shut off the tractor engine, and remove key.
2. Engage cylinder lift lock.
3. Slide the windrow forming shields away from each other.
4. Lubricate roll pivot on both sides with John Deere SD POLYUREA GREASE.

GW44282,00006ED-19-28OCT16

Every 10 Hours - Roll Driveline

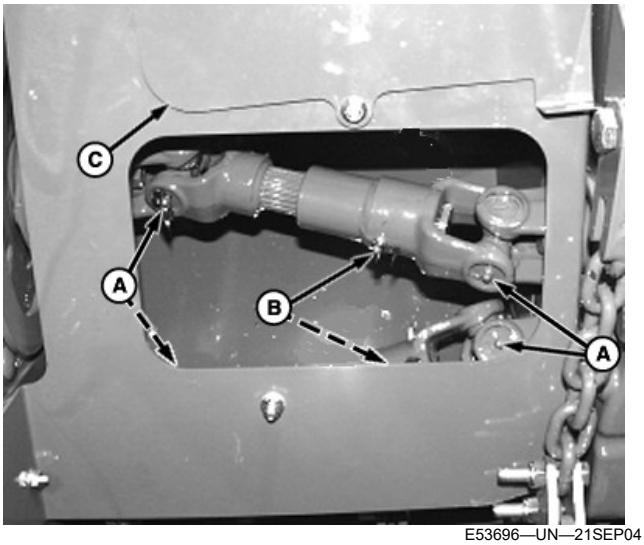

E53696—UN—21SEP04

A—Upper and Lower Yokes
B—Upper and Lower Grooved Arms
C—Access Door

Loosen nut and raise access door (C).

Rotate rolls to align lubrication fittings. (Fittings should all align to permit access.)

Lubricate with John Deere SD POLYUREA GREASE.

OUO6085,0000800-19-03AUG07

After First 50 Hours - Swivel Hitch Gear Cases

IMPORTANT: Change oil in swivel hitch gear cases after the first 50 hours of use then every 250 hours of operation or yearly, whichever comes first.

Draining and Refilling Swivel Hitch Gear Cases

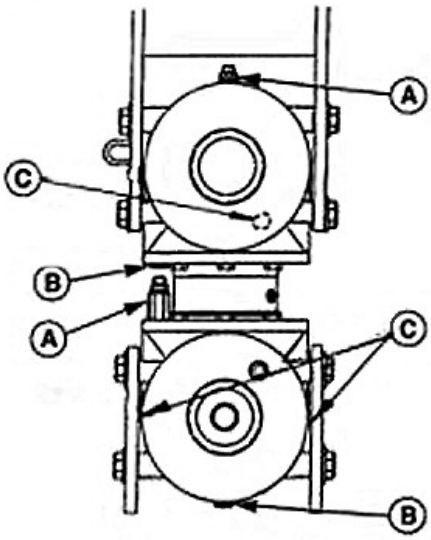

E53502—UN—21JUL04

A—Gear Case Refill Plugs
B—Drain Plugs
C—Level Plugs

Drain the oil while it is hot (after machine operation).

Position swivel hitch gear case in normal operating position with vertical shaft in true ”vertical” position.

Pull out plugs (A) and (B) then drain the oil into a suitable receptacle.

Add 0.8 liters (0.85 US qt) of oil into the upper gear case. Add 2.4 liters (2.5 US qt) of oil into the lower gear case. Use oil specified under ”Swivel Gear Case Oil”.

Check the oil level at bores of level plugs (C).

Clean all plugs before reinstalling them.

OUO6085,00001CD-19-31MAY07

After the First 50 Hours - Cutterbar Input Drive Gear Case

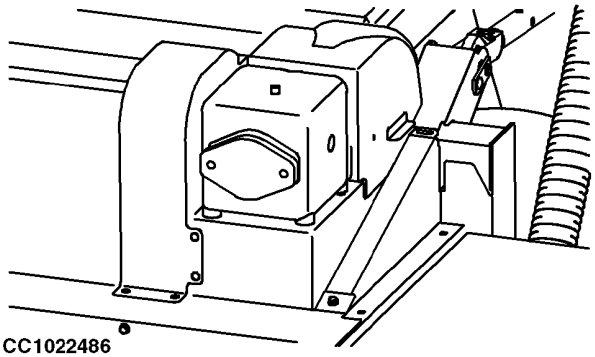

CC1022486—UN—13DEC02

Change the oil in the cutterbar input drive gear case after the first 50 hours (see ”Every 250 Hours or Yearly -

Draining and Refilling Cutterbar Input Drive Gear Case" in this Section).

OUO6085,000022D-19-30MAY06

After the First 50 Hours - Cutterbar

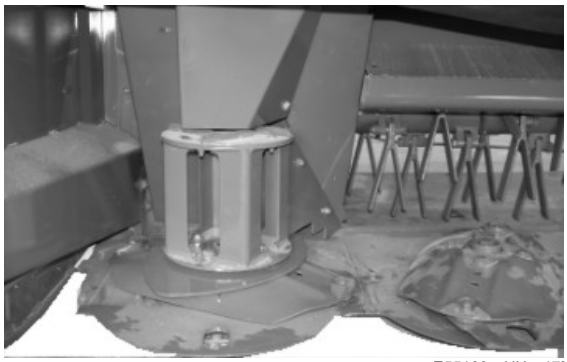

E55163—UN—17MAY07

Change oil in cutterbar after the first 50 hours of use. (See "Every 250 Hours or Yearly - Draining and Refilling Cutterbar" in this Section.) After first 50 hours, drain and refill every 250 hours or yearly, whichever comes first.

OUO6085,000022E-19-30MAY07

Every 50 Hours - Check Cutterbar Oil Level

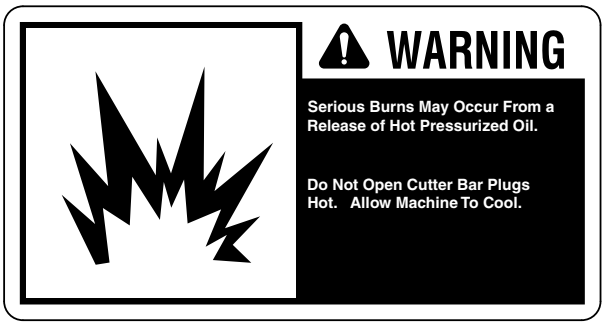

SSFH343681—19—17AUG20

CAUTION: Prevent possible risk of a burn injury from a spray release of hot oil. Allow the machine to cool before checking or changing the oil. Do NOT remove the fill plug, only use the check plugs to check the oil level and drain. Oil can be hot. Do NOT check or change the oil when hot. Oil can be under pressure. Do NOT overfill with oil.

IMPORTANT: Prevent possible machine damage or malfunction. Too much oil in the cutterbar causes overheating and machine damage. Do NOT overfill the cutterbar.

NOTE: Change the cutterbar oil after the first 50 hours and then every 250 hours or yearly, whichever comes first.

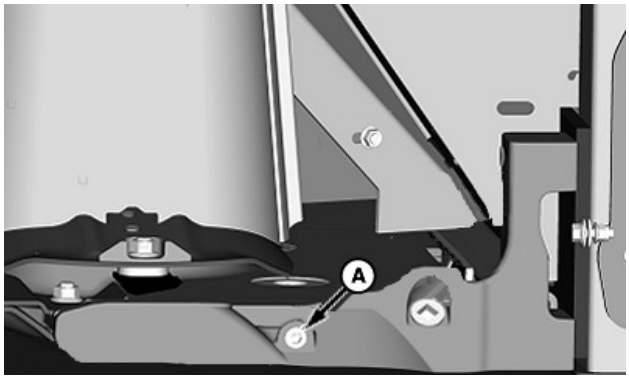

E93539—UN—07MAY20

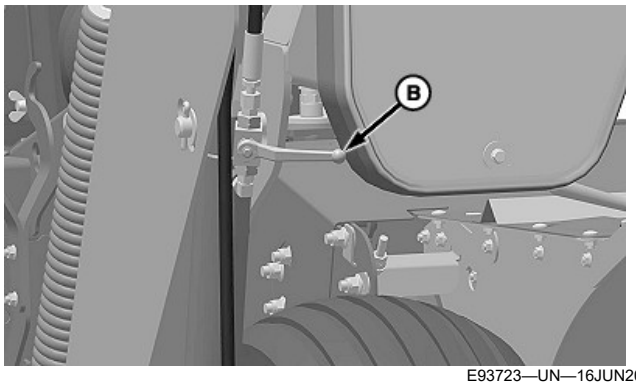

E93723—UN—16JUN20

A—Check Plug (1 each side)
B—Lift Cylinder Lock

Allow the machine to cool before checking the cutterbar oil.

To check the cutterbar oil level:

1. Park the machine on a firm, level surface.
2. Raise the platform and engage the lift cylinder lock (B).
3. Shut off the engine and remove the ignition key.

NOTE: Cutterbar tilt does not matter due to location of the check plug.

4. Position the platform horizontal (level) by using a jack under the low end. Give the cutterbar oil time to equalize.
5. To check the oil level, loosen check plug (A) at both ends of the cutterbar.

Observations	Oil Level
Oil runs out of the check plugs.	Correct
Oil runs full stream out of the check plugs.	Too high
No oil drips out of either plug.	Too low
Oil runs out of one plug and not the other.	Put platform in horizontal (level) position and recheck.

6. To add oil, see Change Cutterbar Oil—Every 250 hours or Yearly in this section.
7. Retighten check plugs (A) to specification.

Specification	
Check Plug—Torque	35 N·m (26 lb·ft)

NOTE: Add thread sealant as needed.

KWPZAG2,00001A3-19-09NOV20

Every 50 Hours - Belt Idler Tensioning Spring

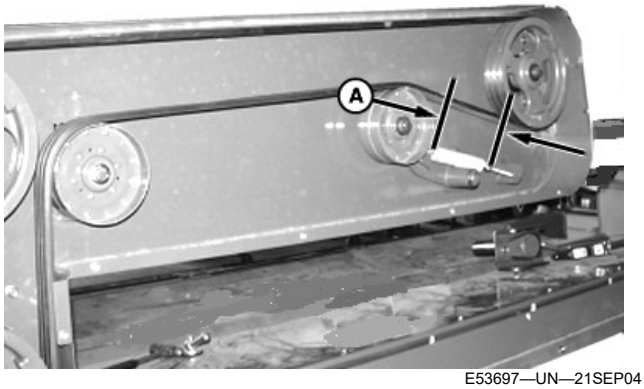

E53697—UN—21SEP04

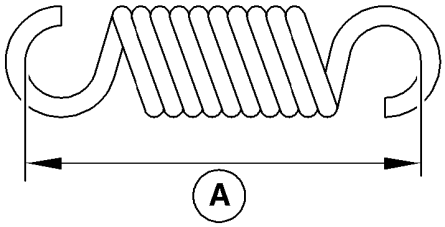

CC1022283

CC1022283—UN—03DEC02

A—Drive belt idler tensioning spring

Main Drive Belt Idler Tensioning Spring

On mower-conditioner equipped for 540 rpm PTO:

Check that length of belt idler tensioning spring is 276 mm (10.9 in.) (A) (inside-of-hook to inside-of-hook) . Adjust if required.

On mower-conditioner equipped for 1000 rpm PTO:

Check that length of belt idler tensioning spring is 233 mm (9.2 in.) (A) (inside-of-hook to inside-of-hook) . Adjust if required.

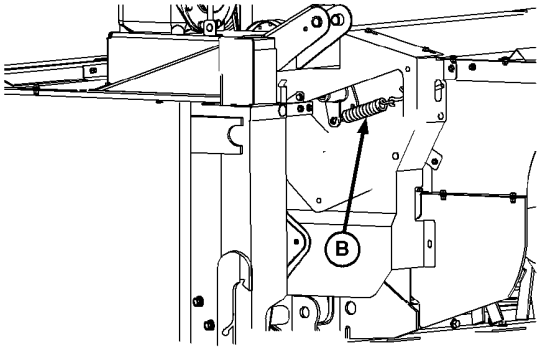

E53880—UN—24NOV04

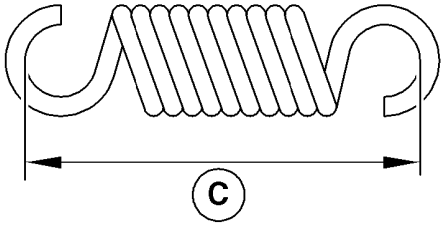

CC1022282

CC1022282—UN—03DEC02

B—Impeller belt idler tensioning spring
C—Spring length (inside-of-hook to inside-of-hook)

Conditioner Belt Idler Tensioning Spring

On mower-conditioner equipped with impeller:

Check that length of belt idler tensioning spring (B) is 233 mm (9.2 in.) (inside-of-hook to inside-of-hook) (C). Adjust if required.

On mower-conditioner equipped with roll conditioner:

Check that length of belt idler tensioning spring (B) is 245 mm (9.65 in.) (inside-of-hook to inside-of-hook) (C). Adjust if required.

OUO6085,000024D-19-30MAY07

Every 50 Hours - Hydraulic Hoses

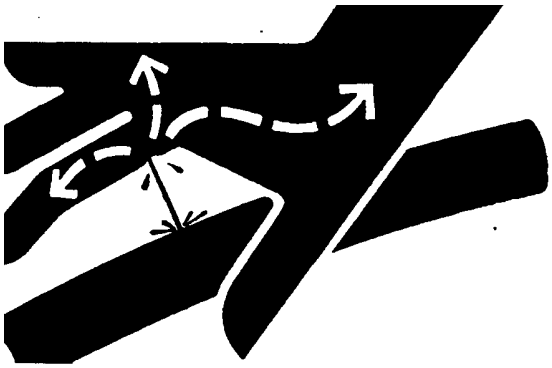

X9811—UN—23AUG88

CAUTION: Escaping fluid under pressure can penetrate the skin causing serious injury. Avoid the hazard by relieving pressure before disconnecting hydraulic or other lines. Tighten all connections before applying pressure. Search for leaks with a piece of cardboard. Protect hands and body from high pressure fluids.

If an accident occurs, see a doctor immediately. Any fluid injected into the skin must be surgically removed within a few hours or gangrene may result. Doctors unfamiliar with this type of injury should reference a knowledgeable medical source. Such information is available from Deere & Company Medical Department in Moline, Illinois, U.S.A.

Check condition of hydraulic hoses every 50 hours or weekly, whichever comes first.

Check more often if working in rough conditions.

OUO6085,000077C-19-30MAY07

Every 250 Hours - Cutterbar Input Drive Gear Case Oil Level

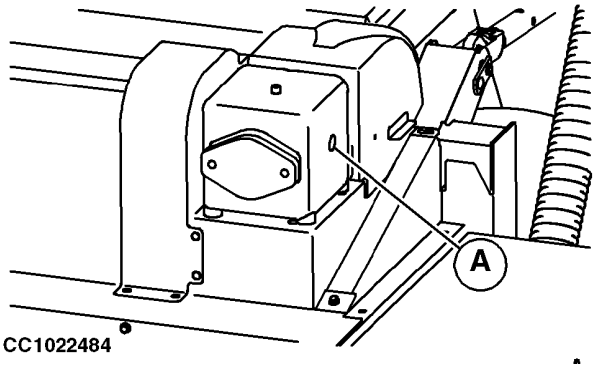

CC1022484—UN—13DEC02

A—Level plug

1. Level gear case.
2. Remove plug (A) to check oil level. Oil should be level with bottom of port. Fill as necessary, with specified oil (see ”Cutterbar and Roll Drive Gear Case Oil” in this section).
3. Apply pipe sealant with TEFLON ®, or equivalent, on threads of plug. Install plug.

OUO6085,000022F-19-10MAY07

Every 250 Hours or Yearly - Draining and Refilling Cutterbar

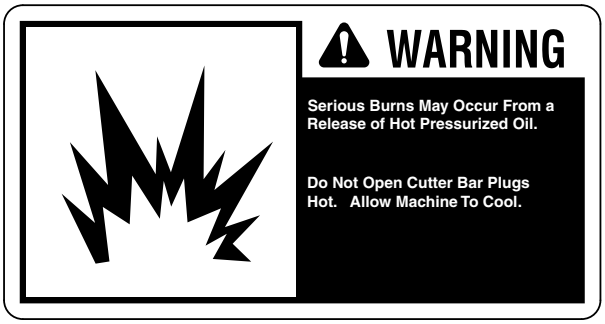

SSFH343681—19—17AUG20

CAUTION: Prevent possible risk of a burn injury from a spray release of hot oil. Allow the machine to cool before checking or changing the oil. Do NOT remove the fill plug, only use the check plugs to check the oil level and drain. Oil can be hot. Do NOT check or change the oil when hot. Oil can be under pressure. Do NOT overfill with oil.

IMPORTANT: Prevent possible machine damage or malfunction. Change the oil in the cutterbar after the first 50 hours of operation and then every 250 hours of operation or yearly, whichever comes first.

Drain Cutterbar

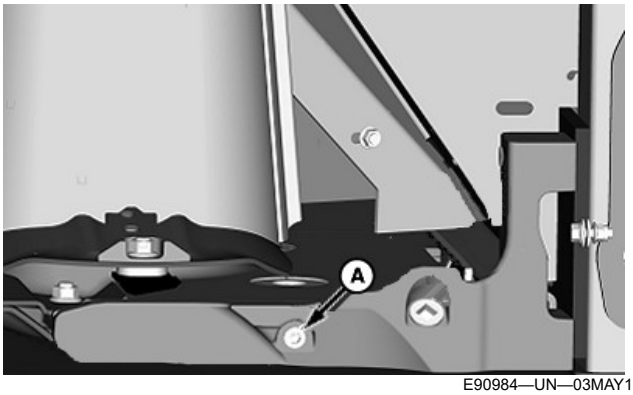

E90984—UN—03MAY19

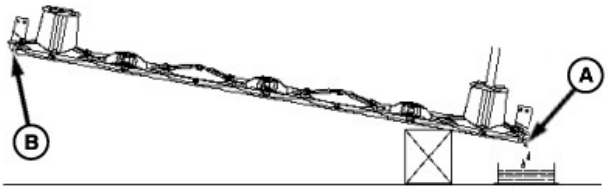

E90985—UN—03MAY19

TEFLON is a registered trademark of DuPont Company.

A—Check Plug, Left-Hand Side
B—Check Plug, Right-Hand Side

1. Allow the machine to cool before changing the cutterbar oil.
2. Start the engine and raise the machine.
3. Shut off the engine and remove the ignition key. Wait for all machine movement to stop.
4. Engage the cylinder lift lock.
5. Place a wood block under the left-hand end of the cutterbar.

NOTE: Leave enough room to place a container under the cutterbar that can hold approximately 15 L (4 gal) of fluid.

6. Place a taller wood block or jackstand under the right-hand end of the cutterbar.
7. Disengage the cylinder lock.
8. Start the engine and lower the machine onto the blocks and/or jackstand.
9. Shut off the engine and remove the ignition key. Wait for all machine movement to stop.
10. Place a container that can hold approximately 15 L (4 gal) of fluid under the cutterbar left-hand side check plug (A).
11. To vent the cutterbar for draining, remove the right-hand side check plug (B).
12. To drain the oil, remove the left-hand side check plug (A).
13. Apply sealant on the threads of check plugs (A and B).
14. Reinstall check plugs (A and B) after the oil has been drained. Tighten the check plugs (A and B) to specification.

Specification

Check Plugs (A and B)—Torque . . . . . 35 N·m (26 lb·ft)

15. Start the engine and raise the machine.
16. Shut off the engine and remove the ignition key. Wait for all machine movement to stop.
17. Engage the lift cylinder lock.
18. Remove the wood blocks/jackstand.
19. Disengage the lift cylinder lock.
20. Start the engine and lower the machine to the ground.

Refill Cutterbar

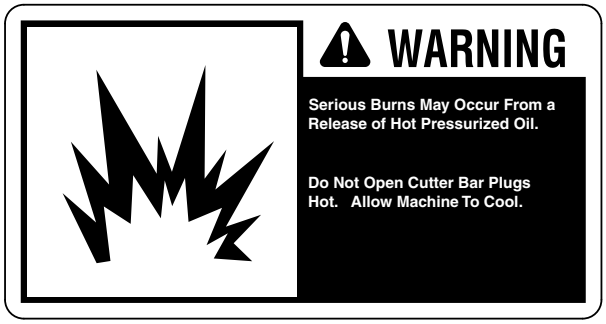

SSFH343681—19—17AUG20

CAUTION: Prevent possible risk of a burn injury from a spray release of hot oil. Allow the machine to cool before checking or changing the oil. Do NOT remove the fill plug, only use the check plugs to check the oil level and drain. Oil can be hot. Do NOT check or change the oil when hot. Oil can be under pressure. Do NOT overfill with oil.

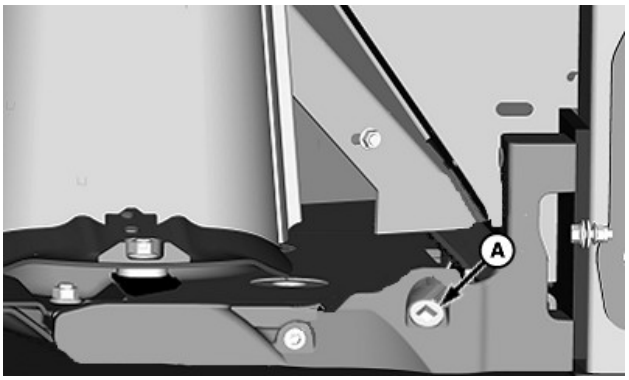

E90986—UN—03MAY19

A—Refill Plug

1. Allow the machine to cool.
2. Start the engine and lower the machine.
3. Shut off the engine and remove the ignition key. Wait for all machine movement to stop.
4. Ensure that the cutterbar is level, side-to-side and front-to-back.
5. Make sure that the cutterbar is cool. Do NOT remove the refill plug if the oil is hot. Remove the refill plug (A).
6. Add oil. Use oil specified under Cutterbar Oil, Platform Gear Case Oil, and Roll Drive Gear Case Oil is this section. See Gear Case and Cutterbar Capacities in Specifications section.

NOTE: Approximate cutterbar oil capacity:

Cutterbar Oil Capacity — Specification

525, 625 Mower-Conditioner—Capacity. . . . . 5.7 L (6.0 U.S. qt)

530, 630, 730, 830 Mower-Conditioner—Capacity. . . . . 7 L (7.4 U.S. qt)
535, 635, 735, 835 Mower-Conditioner—Capacity. . . . . 8 L (8.5 U.S. qt)

7. Apply sealant on the threads of the refill plug (A).
8. Install the refill plug (A) and tighten to specification.

Specification

Refill plug (A)—Torque. . . . . 60 N·m (44 lb·ft)

9. Check the oil level. See Check Cutterbar Oil Level—Every 50 Hours.

KWPZAG2,00001A4-19-09NOV20

Every 250 Hours or Yearly - Draining and Refilling Swivel Hitch Gear Cases

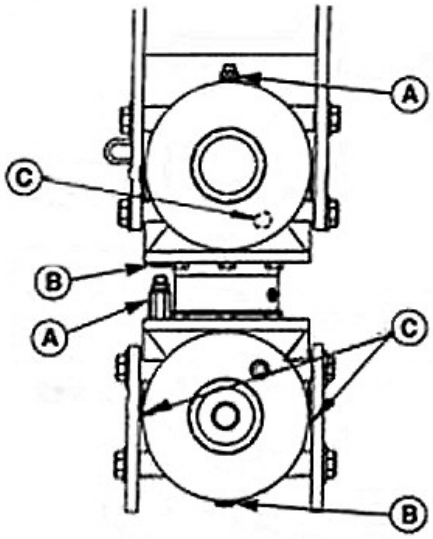

E53502—UN—21JUL04

A—Gear case refill plugs
B—Drain plugs
C—Level plugs

IMPORTANT: Change the oil in the swivel hitch gear cases every 250 hours or yearly, whichever comes first.

1. Drain the oil while it is hot (after machine operation).
2. Position swivel hitch gear case in normal operating position with vertical shaft in true ”vertical” position.
3. Pull out plugs (A) and (B) then drain the oil into a suitable receptacle.
4. Add 0.8 liters (0.85 US qt) of oil into the upper gear case. Add 2.4 liters (2.5 US qt) of oil into the lower gear case. Use oil specified under ”Gear Case Oil”.
5. Check the oil level at bores of level plugs (C).
6. Clean all plugs before reinstalling them.

OUO6085,00001CF-19-05JUN07

Every 250 Hours or Yearly - Swivel Hitch Gear Case Pivot

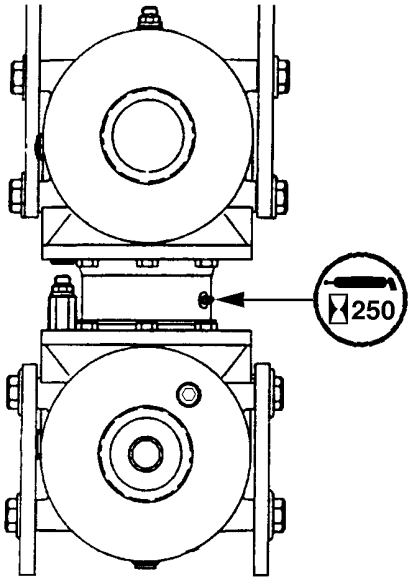

CC1020998

CC1020998—UN—11MAR02

Lubricate with John Deere SD POLYUREA GREASE.

OUO6085,0000801-19-03AUG07

Every 250 Hours or Yearly - Roll Drive Gear Case

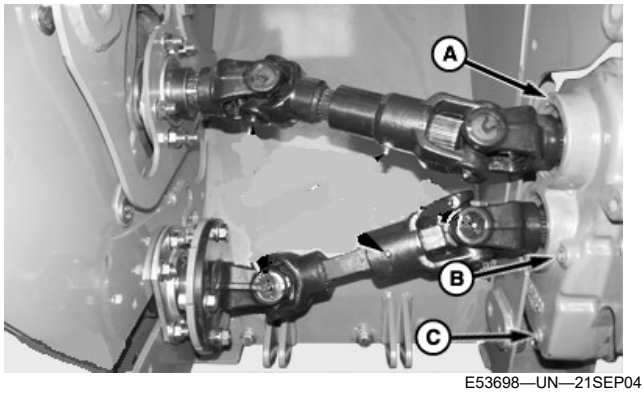

E53698—UN—21SEP04

Shield Removed For Illustration

A—Roll Drive Gear case
B—Fill and Level Plug

C—Drain Plug

Change oil in roll drive gear case (A).

Drain oil while it is hot (after machine operation).

1. Raise machine using tractor hydraulics. Apply handbrake, place transmission in park, shut off tractor engine and remove key.
2. Engage cylinder lift lock.
3. Remove gear case fill and level plug (B).
4. Place a small container, of suitable size, under plug (C).
5. Remove plug (C) and drain oil.
6. Reinstall drain plug (C).
7. Add oil (use oil specified under “Cutterbar and Roll Drive Gear Case Oil” in this section) until it starts to run out of hole (B).
8. Reinstall fill plug (B), record date and hours oil was changed.

OUO6085,00001C2-19-05JUN07

Every 250 Hours or Yearly - Draining and Refilling Cutterbar Input Drive Gear Case

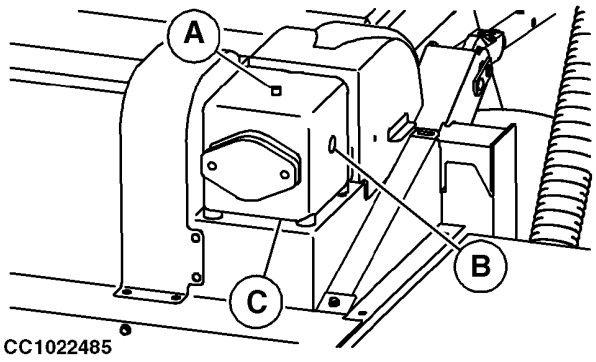

CC1022485—UN—13DEC02

A—Gear case refill plug
B—Level plug
C—Drain plug

IMPORTANT: Change the oil in the cutterbar input drive gear case every 250 hours or yearly, whichever comes first.

Drain the oil while it is hot (after machine operation).

1. Lower platform using tractor hydraulics. Apply handbrake, place transmission in park, shut off tractor engine and remove key.
2. Level gear case.
3. Pull out plug (A).
4. Place a suitable receptacle under drain plug (C).
5. Pull out drain plug (C) and drain oil.

NOTE: Clean all plugs before reinstalling them.

6. Reinstall drain plug (C).
7. Remove plug (B).
8. Add oil in the cutterbar input drive gear case up to the bore of level plug (B). Use oil specified under ”Gear Case Oil”.
9. Check the oil level at bore of level plug (B).
10. Reinstall plugs (A) and (B).

OUO6085,0000231-19-05JUN07

Each Season - Phasing Cylinders

NOTE: Set tractor SCV to maximum flow.

1. Lower machine to the ground.
2. Raise machine and continue to hold SCV lever at least 5 seconds until slave cylinder is completely extended.
3. Lower machine and continue to hold SCV lever until slave cylinder is completely retracted.
4. If slave cylinder does not retract, check for binding or obstruction of linkage at both the master and the slave cylinder.
5. If master cylinder is retracted, a rephasing groove may be plugged. (See your John Deere dealer.)

CC03745,00002ED-19-21JUN06

Every 6 Years - Hydraulic Hoses

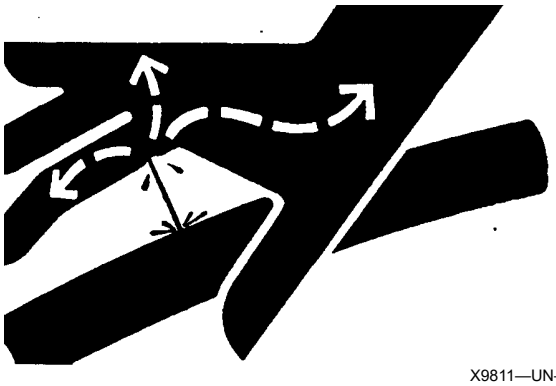

X9811—UN—23AUG88

CAUTION: Escaping fluid under pressure can penetrate the skin causing serious injury. Avoid the hazard by relieving pressure before disconnecting hydraulic or other lines. Tighten all connections before applying pressure. Search for leaks with a piece of cardboard. Protect hands and body from high pressure fluids.

If an accident occurs, see a doctor immediately. Any fluid injected into the skin must be surgically removed within a few hours or gangrene may result. Doctors unfamiliar with this type of injury should reference a knowledgeable medical source. Such information is available from Deere & Company Medical Department in Moline, Illinois, U.S.A.

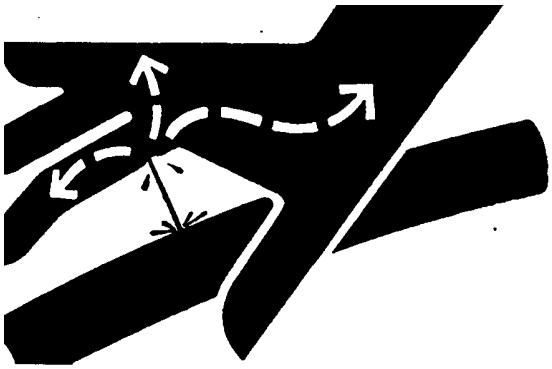

X9811—UN—23AUG88

Due to wear on hydraulic hoses over time, it is recommended to change hydraulic hoses every 6 years.

CC03745,00005D8-19-05JUN07

Mower-Conditioner Operation

Symptom	Problem	Solution
Excessive noise and vibration	Mower-conditioner incorrectly attached to tractor.	Attach mower-conditioner correctly (see “Attaching and Detaching” Section).
	Roll conditioner; Rolls too close.	Adjust roll spacing (see “Adjusting Roll Spacing” in “Operating the Mower-Conditioner” Section).
	Loose hardware.	Check tightness of hardware.
	Loose hex. shaft bearing supports.	Check tightness of hex. shaft bearing supports on left-hand side of tongue.
	Damaged hex. shaft bearing/supports inside tongue.	Remove plastic plugs from left-hand side of tongue and check. Replace if necessary (see your John Deere dealer).
	Impeller conditioner; Impeller tines missing.	Replace missing tines.
Damaged leaves and broken stems	Roll conditioner; Roll pressure too high.	Adjust roll pressure (see “Adjusting roll pressure” in “Operating the Mower-Conditioner” Section).
	Roll conditioner; Rolls too close.	Adjust roll spacing. (See “Adjusting roll spacing” in “Operating the Mower-Conditioner” Section)
	Impeller conditioner; Excessive impeller rotor speed.	Reduce rotor speed (see “Changing Impeller Rotor Speed” in “Operating the Mower-Conditioner” Section).
	Impeller conditioner; Conditioning hood too close to rotor.	Reposition conditioning hood (see “Adjusting Conditioning Intensity” in “Operating the Mower-Conditioner” Section).
Rolls plugging (Roll conditioner)	Foreign objects between rolls.	Disengage tractor PTO and stop engine. When all moving parts have completely stopped, remove foreign objects.
	Roll pressure too high.	Adjust roll pressure (see “Adjusting Roll Pressure” in “Operating the Mower-Conditioner” Section).
	Roll conditioner; Rolls too close.	Adjust roll spacing. (See “Adjusting Roll Spacing” in “Operating the Mower-Conditioner” Section)
	Cutting height too low.	Raise cutterbar.

Symptom	Problem	Solution
	Operating in very heavy crop.	Reduce ground speed or cut less than full width of cutterbar.
	Incorrect PTO speed.	Correct PTO speed.
	Operating in very long crop.	Increase roll spacing (see “Adjusting Roll Spacing” in “Operating the Mower-Conditioner” Section).
Cutterbar plugging	Wet ground conditions causing plugging.	Increase cutting height by reducing platform angle (see “Adjusting Cutting Height” in “Operating the Mower-Conditioner” Section).
		Adjust side gauge shoes (see “Adjusting Cutting Height” in “Operating the Mower-Conditioner” Section).
		Adjust float springs (see “Adjusting Platform Float” in “Operating the Mower-Conditioner” Section).
	Bunching/recirculation of crop.	Check/adjust shield spacing around drums (See Service Section for correct clearances).
		Check/replace crop accelerators if necessary.
	Impeller conditioner hood set too low	Raise conditioner hood
	Bent or broken knives	Replace Knives (See “Removing Knives “ and “Installing Knives” in “Service” Section).
	Crop plugging, or wrapping, above and behind converging drum on end disk.	Check and replace crop accelerators if necessary.
Ragged cut	Incorrect platform float spring adjustment (header too light).	Adjust float springs (see “Adjusting Platform Float” in “Operating the Mower-Conditioner” Section).
	Incorrect cutterbar angle.	Change cutterbar angle (tilt down) (see “Adjusting Cutting Height” in “Operating the Mower-Conditioner” Section).
	Slow impeller rotor speed.	Increase rotor speed (see “Changing Impeller Rotor Speed” in “Operating the Mower-Conditioner” Section).

Symptom	Problem	Solution
	Dull knives.	Reverse or replace knives (see “Removing Knives” and “Installing Knives” in “Service” Section).
	Knives incorrectly installed.	Install knives correctly (see “Installing Knives” in “Service” Section).
	Excessive ground speed.	Reduce ground speed.
	Incorrect cutting height.	Adjust side gauge shoes (see “Adjusting Cutting Height” in “Operating the Mower-Conditioner” Section).
		Change cutterbar angle (see “Adjusting Cutting Height” in “Operating the Mower-Conditioner” Section).
	Down or lodged crop.	Tilt cutterbar down (see “Adjusting Cutting Height” in “Operating the Mower-Conditioner” Section).
	Disk driver hub sheared. Disk not driven at full speed.	Replace disk driver (see procedure in “Service” Section).
	Crop accelerators damaged or worn.	Replace accelerators (see “Replacing Crop Accelerators” in “Service” Section).
	Lower crop shield damaged.	Repair or replace shield.
Frequent breakage or bending of knives	Cutterbar set too low.	Raise cutterbar or adjust side gauge shoes (see “Adjusting Cutting Height” in “Operating the Mower-Conditioner” Section).
	Incorrect platform float spring adjustment (cutterbar too heavy).	Adjust float springs (decrease weight) (see “Adjusting Platform Float” in “Operating the Mower-Conditioner” Section).
	Incorrect knife mounting.	Check knife bolts and nuts (see “Checking Knife Bolt Wear” and “Checking Knife Lock Nut Wear” in “Service” Section).
		Check knives. Make sure knives rotate freely on bolts (see “Checking Knife Wear” and “Installing Knives” in “Service” Section).
Poorly formed or bunchy windrows	Incorrect PTO speed.	Correct PTO speed.
	Ground speed too slow.	Increase ground speed.

Symptom	Problem	Solution
	Crop accelerators damaged or worn.	Replace accelerators (see “Replacing Crop Accelerators” in “Service” Section).
	Heavy crop at centers of swath.	Install crop accelerators on the two center diverging disks.
	Slow impeller rotor speed.	Increase rotor speed (see “Changing Impeller Rotor Speed” in “Operating the Mower-Conditioner” Section).
	Conditioning hood too far away from rotor.	Reposition conditioning hood (see “Adjusting Conditioning Intensity” in “Operating the Mower-Conditioner” Section).
Strips of uncut material left on field	Broken or excessively worn knives.	Replace knives (see “Removing Knives” and “Installing Knives” in “Service” Section).
	Mud and/or foreign objects on cutterbar.	Disengage tractor PTO and stop engine. When all moving parts have completely stopped, remove mud and/or foreign objects.
	Incorrect platform float spring adjustment.	Adjust float springs (see “Adjusting Platform Float” in “Operating the Mower-Conditioner” Section).
	Strips of uncut material passing between disks.	Improper platform weight (see “Adjusting Platform Float” in “Operating the Mower-Conditioner” Section).
		Turn or replace knives before end is worn to halfway point (see “Removing Knives” and “Installing Knives” in “Service” Section).
		Clean or replace wear plates between disks.
		Check knife wear (see “Checking Knife Wear” in “Service” Section).
	Disk driver hub sheared. Disk not driven at full speed.	Replace disk driver (see procedure in “Service” Section).
	Crop accelerators damaged or worn.	Replace accelerators (see “Replacing Crop Accelerators” in “Service” Section).

Symptom	Problem	Solution
V-Belt breakage	Incorrect belt tension.	Replace belt and adjust belt tension (see “Replacing Main Drive Belt”, “Adjusting Main Drive Belt Tension”, “Replacing Impeller Drive Belt” and “Adjusting Impeller Drive Belt Tension” in “Service” Section).
Crop wrapping on impeller	Impeller running too slow.	Operate impeller in high speed (see “Changing Impeller Rotor Speed” in “Operating the Mower-Conditioner” Section).
	Ground speed too slow.	Increase ground speed.
Machine vibration	Tractor driveline not running level.	Adjust hitch height to level driveline. (See “Adjusting Equal Angle Hitch” in Preparing the Mower-Conditioner section.)
Excessive driveline vibration in left/ right turn with equal angle tongue.	Tractor hookup U-joint angle is not cancelling vibration	Adjust hitch height on mower-conditioner to move rear U-joint slightly above (or below) horizontal position and recheck for vibration.
Machine will not raise off left-hand side lock channel.	Right-hand lift cylinder fully extended (not on lock channel) but left-hand side cylinder not moving.	Rephase cylinders (see “Bleeding Platform Lift Circuit” in “Service” Section).
Tongue swing too slow	Tractor outlet not on full flow.	Adjust flow control on tractor outlet until tongue swings from one side to the other in 6 to 8 seconds.
	Low hydraulic oil pressure and/or flow from tractor (older models).	Identify swing cylinder rod end hose-to-tractor. Remove orifice from quick-coupler end of hydraulic hose.
Header drop-time too slow	Incorrect tractor outlet for single-acting cylinder system.	Check tractor operator's manual - use correct outlet (see “Connecting Mower-Conditioner to Tractor Hydraulic System” in “Attaching and Detaching” Section).
	Excessive back pressure at tractor outlet.	Adjust flow control on tractor outlet to get 1 to 2 second drop-time.
		Change orifice size in lift hose (see your John Deere dealer for optional size orifices).

OUO6085,00006EF-19-19AUG08

Telescoping Hook-Up Locking System

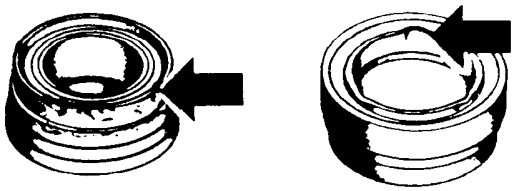

CC001359

CC001359—UN—23FEB95

Symptom	Problem	Solution
Locking system tight or completely seized	Locking system soiled	Clean and grease lock and yoke shank
	Locking system damage on the outside (due to forced engagement, incorrect handling, insufficient clearance)	Follow service instructions, replace sleeve, provide more clearance
	Axial forces too high	Clean and grease profile tubes, or replace tubes, if necessary
	Sleeve deformed in the area of the balls	Replace locking system

OUO6085,00008E3-19-03JUN08

End Yokes

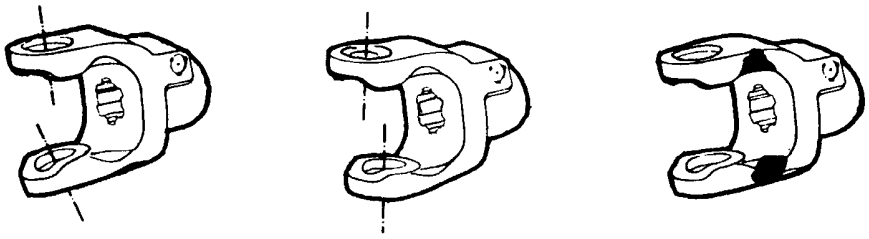

CC001360

CC001360—UN—23FEB95

Symptom	Problem	Solution
Yoke ears spread	Axial forces too high	Clean and grease profile tubes; replace both tubes, if necessary Replace parts
Yoke ears distorted	Overload caused by high starting and peak torques	Replace parts
Pressure marks on yoke ears	Excessive bending of rotating drive shaft due to bad adjustment of hitch	Adjust hitch. (See “Preparing the Mower-Conditioner” and “Attaching and Detaching” Section)

Symptom	Problem	Solution
Bearing caps blued	Insufficient lubrication	Replace bearing caps

CC03745,00005D9-19-31DEC03

Inboard Yokes

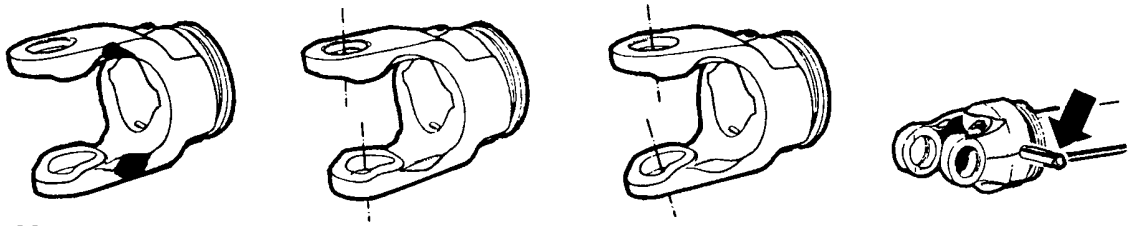

CC001361

CC001361—UN—23FEB95

Symptom	Problem	Solution
Yoke not fixed on profile tubes, pin moving	Excessive dynamic load. Unequal or excessive joint angles	Check correct fit of yoke and tube Replace parts
Yoke ears spread	Axial forces too high	Clean and grease profile tubes; replace both tubes, if necessary
Yoke ears distorted	Overload caused by high starting and peak torques	Replace parts
Pressure marks on yoke ears	Excessive bending of rotating drive shaft due to bad adjustment of hitch	Adjust hitch (See “Preparing the Mower-Conditioner” and “Attaching and Detaching” Section)
Bearing caps blued	Insufficient lubrication	Replace bearing caps

CC03745,00005DA-19-31DEC03

Telescoping Hook-Up Guards

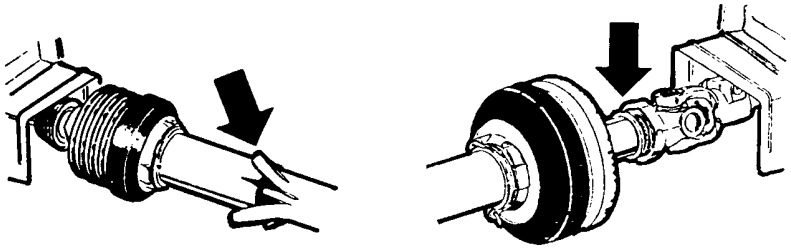

CC001363

CC001363—UN—23FEB95

Symptom	Problem	Solution
Guard tubes deformed and split on one side	Guard tubes worn	Replace parts

Symptom	Problem	Solution
Premature wear of guard bearing	Guard tubes interfering with components on the tractor	Ensure adequate clearance to tractor components Replace parts
	Extremely dirty or damaged guard tubes	Clean guard tubes Replace parts

CC03745,00005DB-19-31DEC03

Metric Bolt and Screw Torque Values

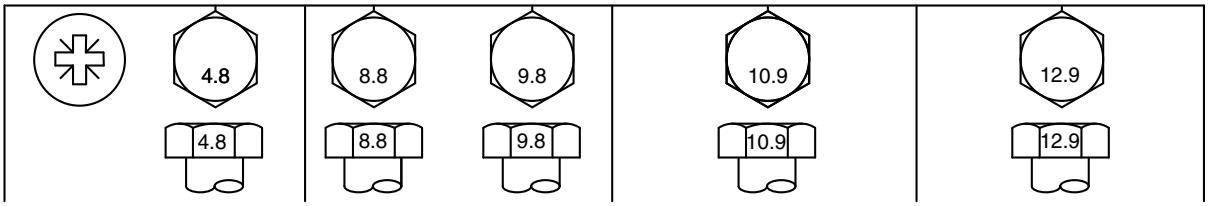

TS1742—UN—31MAY18

Bolt or Screw Size	Class 4.8				Class 8.8 or 9.8				Class 10.9				Class 12.9			
	Hex Head[a]		Flange Head[b]		Hex Head[a]		Flange Head[b]		Hex Head[a]		Flange Head[b]		Hex Head[a]		Flange Head[b]	
	N·m	lb·in	N·m	lb·in	N·m	lb·in	N·m	lb·in	N·m	lb·in	N·m	lb·in	N·m	lb·in	N·m	lb·in
M6	3.6	31.9	3.9	34.5	6.7	59.3	7.3	64.6	9.8	86.7	10.8	95.6	11.5	102	12.6	112
									N·m	lb·ft	N·m	lb·ft	N·m	lb·ft	N·m	lb·ft
M8	8.6	76.1	9.4	83.2	16.2	143	17.6	156	23.8	17.6	25.9	19.1	27.8	20.5	30.3	22.3
			N·m	lb·ft	N·m	lb·ft	N·m	lb·ft								
M10	16.9	150	18.4	13.6	31.9	23.5	34.7	25.6	46.8	34.5	51	37.6	55	40.6	60	44.3
	N·m	lb·ft														
M12	—	—	—	—	55	40.6	61	45	81	59.7	89	65.6	95	70.1	105	77.4
M14	—	—	—	—	87	64.2	96	70.8	128	94.4	141	104	150	111	165	122
M16	—	—	—	—	135	99.6	149	110	198	146	219	162	232	171	257	190
M18	—	—	—	—	193	142	214	158	275	203	304	224	322	245	356	263
M20	—	—	—	—	272	201	301	222	387	285	428	316	453	334	501	370
M22	—	—	—	—	365	263	405	299	520	384	576	425	608	448	674	497
M24	—	—	—	—	468	345	518	382	666	491	738	544	780	575	864	637
M27	—	—	—	—	683	504	758	559	973	718	1080	797	1139	840	1263	932
M30	—	—	—	—	932	687	1029	759	1327	979	1466	1081	1553	1145	1715	1265
M33	—	—	—	—	1258	928	1398	1031	1788	1319	1986	1465	2092	1543	2324	1714
M36	—	—	—	—	1617	1193	1789	1319	2303	1699	2548	1879	2695	1988	2982	2199

The nominal torque values listed are for general use only with the assumed wrenching accuracy of 20%, such as a manual torque wrench.
DO NOT use these values if a different torque value or tightening procedure is given for a specific application.
For lock nuts, for stainless steel fasteners, or for nuts on U-bolts, see the tightening instructions for the specific application.

Replace fasteners with the same or higher property class. If higher property class fasteners are used, tighten these to the strength of the original.

- Make sure that fastener threads are clean.
- Apply a thin coat of Hy-Gard™ or equivalent oil under the head and on the threads of the fastener, as shown in the following image.
- Be conservative with the amount of oil to reduce the potential for hydraulic lockup in blind holes due to excessive oil.
- Properly start thread engagement.

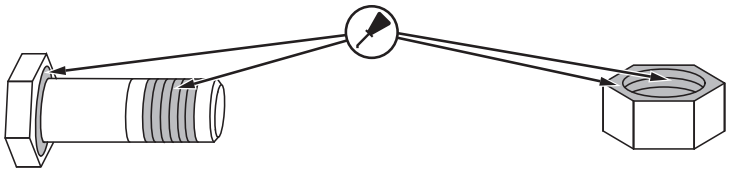

TS1741—UN—22MAY18

[a]Hex head column values are valid for ISO 4014 and ISO 4017 hex head, ISO 4162 hex socket head, and ISO 4032 hex nuts.
[b]Hex flange column values are valid for ASME B18.2.3.9M, ISO 4161, or EN 1665 hex flange products.

DX,TORQ2-19-30MAY18

Practice Safe Service Procedures

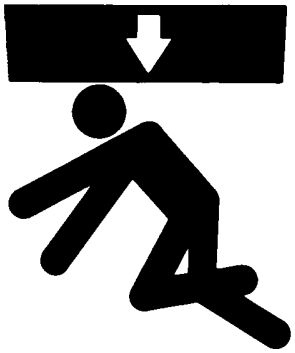

TS261—UN—23AUG88

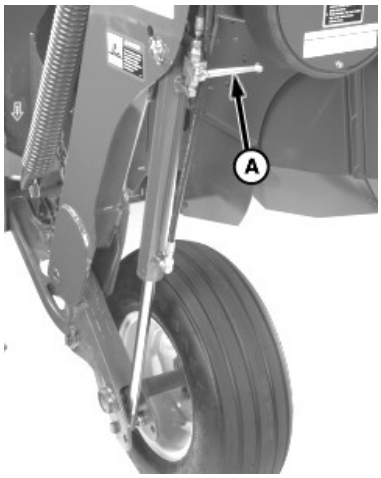

E55154—UN—23MAY07

A—Cylinder Lock

CAUTION: To help prevent personal injury caused by unexpected movement, be sure to service machine on a level surface.

If machine is connected to tractor, disengage PTO, place transmission in "PARK", apply handbrake, shut off engine, remove ignition key and wait until all moving parts have stopped.

If machine is detached from tractor, block wheels to prevent movement.

CAUTION: Engage cylinder lock (A) when working on a raised machine or lower the machine to ground. Failure to do so can result in personal injury or machine damage.

OUO6085,00001D7-19-23MAY07

Use Genuine John Deere Parts

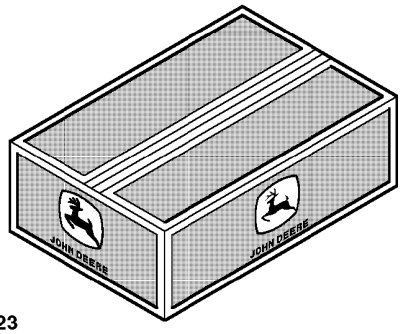

CC1020723

CC1020723—UN—25OCT01

Genuine John Deere parts have been specifically designed for John Deere machines.

Other parts are neither examined nor released by John Deere. Installation and use of such products could have negative effects upon the design characteristics of the machine and thereby affect its safety.

Avoid this risk by using only genuine John Deere parts.

OUCC006,0000514-19-06JUN12

Fire Prevention

Keep foreign material (crop, chaff etc.) from building up on the machine near potentially hot areas, such as bearings. Remove this buildup as part of the regular service operations.

Avoid high pressure power-washing adjacent to the bearings to prevent damaging seals.

Check bearings regularly for early signs of failure, replace as necessary. Turn off power to mower-conditioner and check for unusual noises, hot parts, smells of scorching, and discolored paint or metal. Check condition of bearings.

If service operations require using a welder, cutting torch or grinder, these guidelines may prove useful in preventing a fire:

1. Park mower-conditioner on pavement or bare ground.

2. Remove chaff to minimize exposure of flammable material to sparks; if chaff cannot be removed, soak it thoroughly with water before starting. Protect hoses and belts from exposure to sparks, arcs or flames.

3. Be sure a fully charged water-type fire extinguisher or other source of water is ready for immediate use.

4. Use an assistant to watch for fire while welding, cutting or grinding.

5. After welding, cutting or grinding is finished, wait long enough to allow parts to cool down before starting to

operate machine. Verify that no sparks or slag have started a fire before leaving service area.

CC03745,00005CE-19-15DEC03

Replacing Main Drive Belt

Removing

1. Lower machine to ground.
2. Disengage PTO, place transmission in ”PARK”, apply handbrake, shut off engine, remove ignition key and wait until all moving parts have stopped.
3. Remove cover (A).

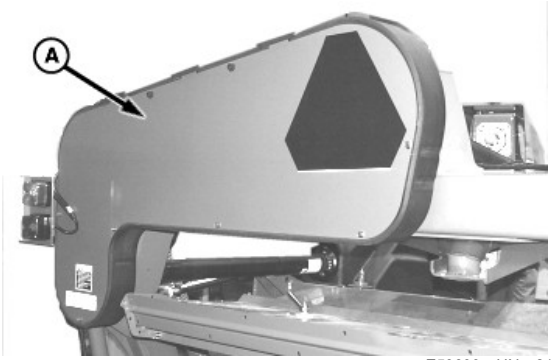

E53699—UN—21SEP04

A—Cover

4. Loosen nuts to relieve spring tension on idler (A).

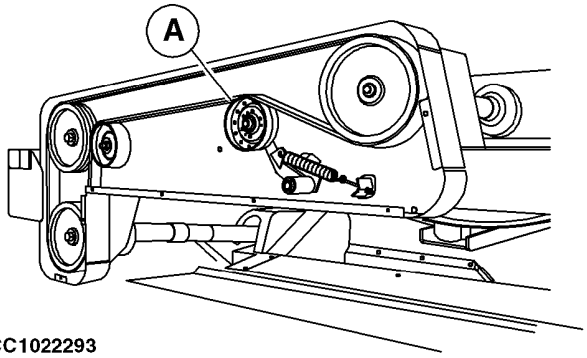

CC1022293

CC1022293—UN—03DEC02

A—Spring-loaded idler

5. Loosen nut, washer and fixed idler (A).

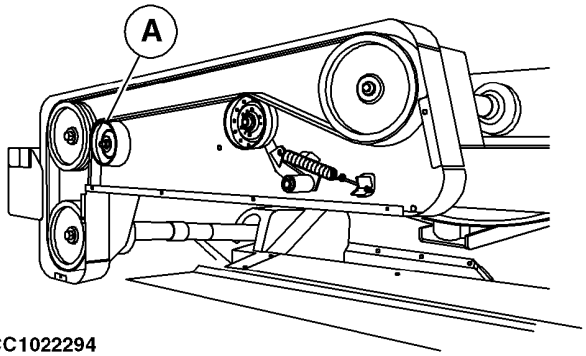

CC1022294

CC1022294—UN—03DEC02

A—Fixed idler

6. Remove main drive belt (A).

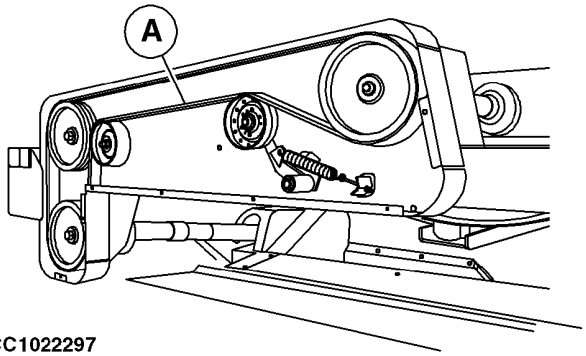

CC1022297

CC1022297—UN—03DEC02

A—Drive Belt

Installing

1. Install new drive belt (A).

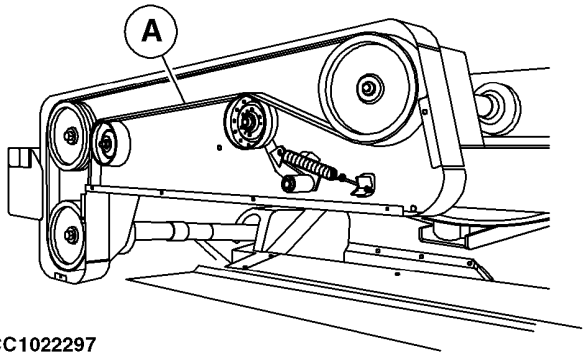

CC1022297

CC1022297—UN—03DEC02

A—Drive Belt

NOTE: When a new belt is installed, idler (A) may not be at the limit of its possible travel.

2. Fully raise fixed idler (A) by hand and tighten nut.

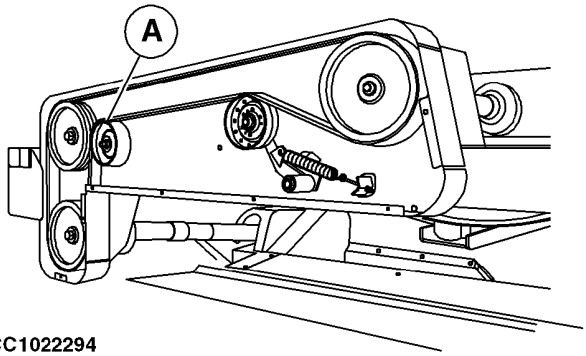

CC1022294

CC1022294—UN—03DEC02

A—Fixed idler

3. Adjust main drive belt tension. See ”Adjusting Main Drive Belt Tension” in this section for adjustment.

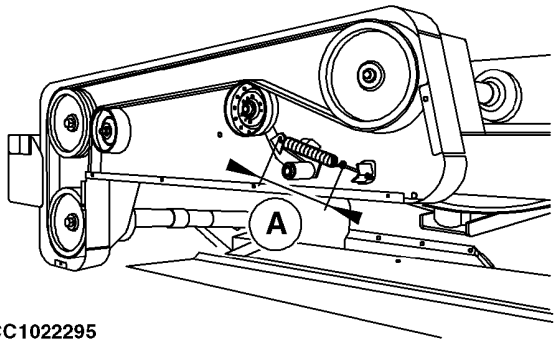

CC1022295

CC1022295—UN—03DEC02

A—Spring length

4. Install cover (A).

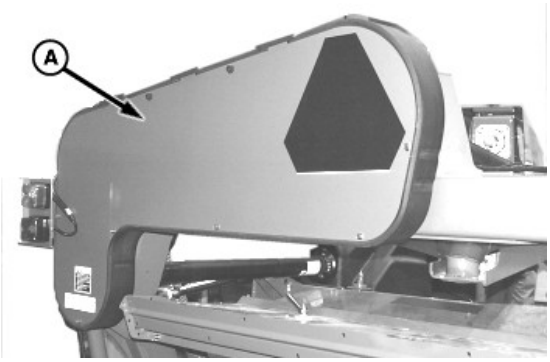

E53699—UN—21SEP04

A—Cover

OUO6085,0000232-19-14JUN06

Adjusting Main Drive Belt Tension

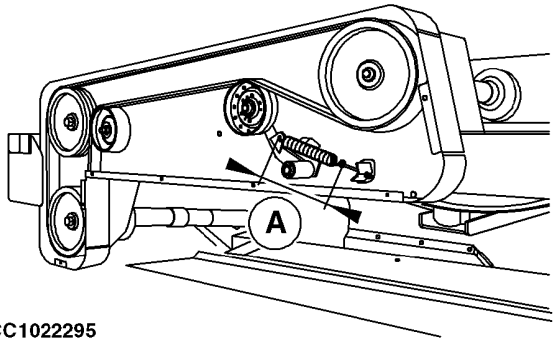

CC1022295

CC1022295—UN—03DEC02

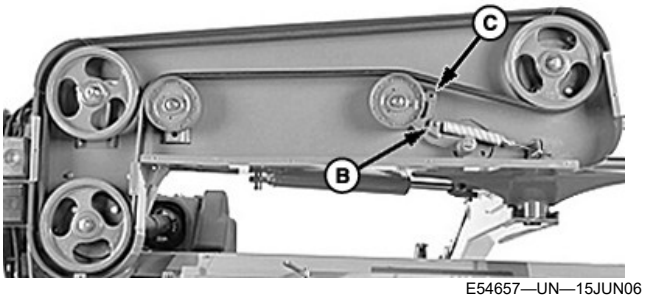

E54657—UN—15JUN06

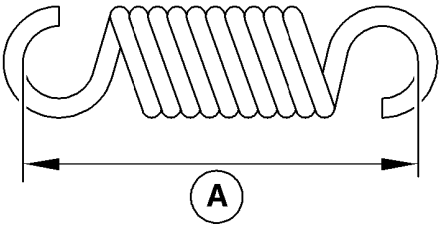

CC1022283

CC1022283—UN—03DEC02

A—Spring length
B—Spring Mounting Hole
C—Top Hole (not used)

NOTE: Spring is placed in hole (B) for both PTO rpms. Top hole (C) on arm is not used.

On mower-conditioner equipped for 540 rpm PTO:

Adjust spring length (A) to 276 mm (10.9 in.) (inside-of-hook to inside-of-hook).

On mower-conditioner equipped for 1000 rpm PTO:

Adjust spring length (A) to 233 mm (9.2 in.) (inside-of-hook to inside-of-hook).

OUO6085,0000710-19-18APR07

Replacing Impeller Drive Belt

1. Remove shield (A).

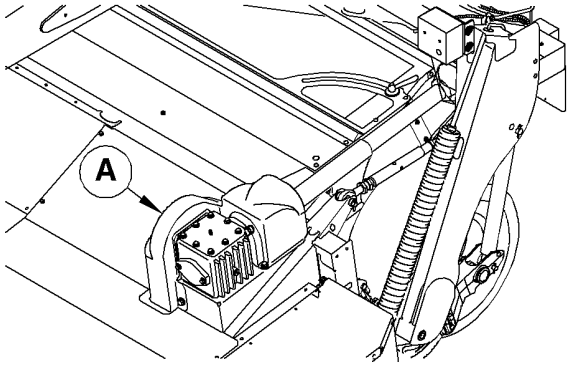

E55098—UN—04MAY07

2. Remove left-hand side shield (A).

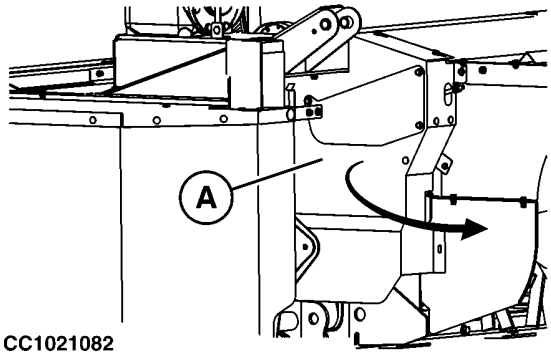

CC1021082

CC1021082—UN—11MAR02

A—Shield

3. Relieve spring tension on idler (A).

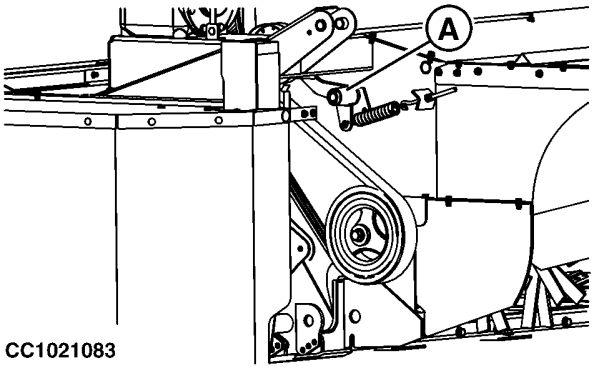

CC1021083

CC1021083—UN—11MAR02

A—Idler

4. Remove drive belt (A) from sheaves.

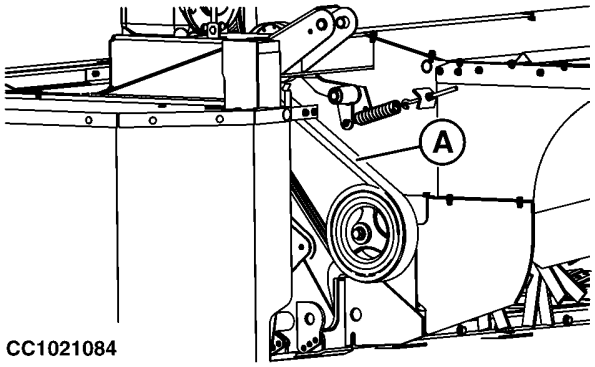

CC1021084

CC1021084—UN—11MAR02

A—Drive belt

5. Pull out belt (A).
6. Install new belt (A).
7. Adjust Impeller Drive Belt Tension. See ”Adjusting Impeller Drive Belt Tension” in this section for adjustment.

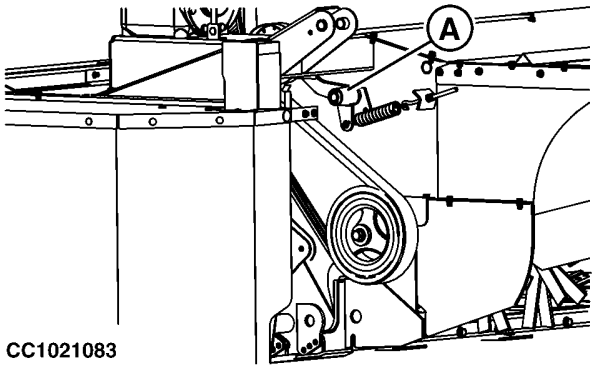

CC1021083

CC1021083—UN—11MAR02

A—Spring-loaded Idler

8. Install left-hand side shield (A).

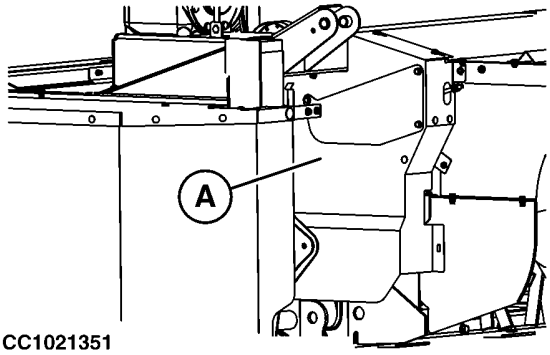

CC1021351

CC1021351—UN—15MAR02

A—Shield

9. Install shield (A).

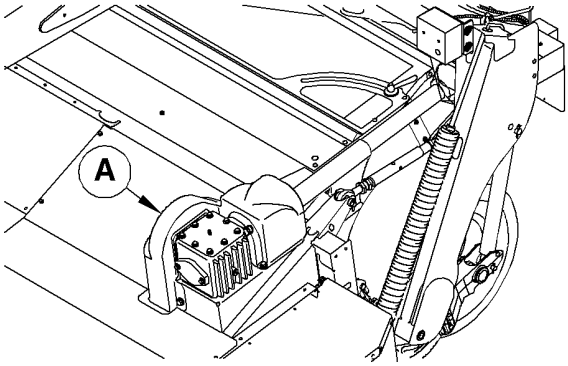

E55098—UN—04MAY07

A—Shield

OUO6085,0000750-19-15MAY07

Adjusting Impeller Drive Belt Tension

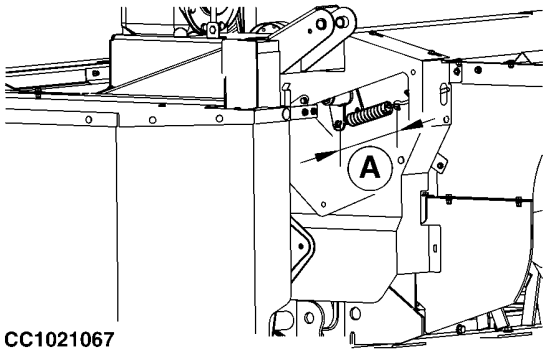

CC1021067—UN—11MAR02

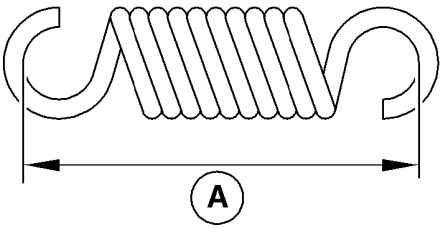

CC1022283—UN—03DEC02

A—Spring length

Adjust spring length (A) to 233 mm (9.2 in.) (inside-of-hook to inside-of-hook).

OUO6085,0000247-19-21JUN06

Replacing Roll Conditioner Drive Belt

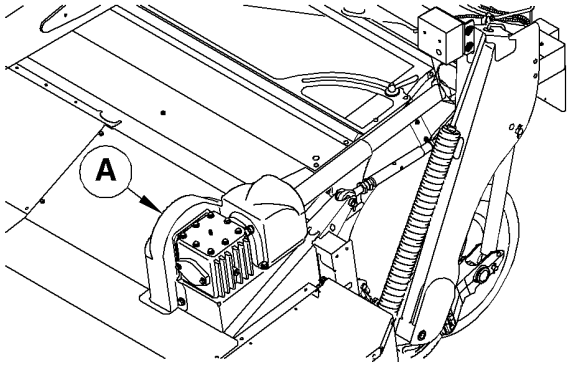

E55098—UN—04MAY07

1. Remove shield (A).

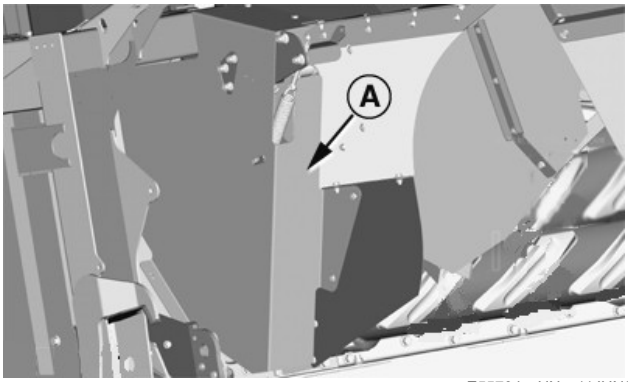

E55794—UN—11JUN08

A—Shield

2. Remove left-hand side shield (A).

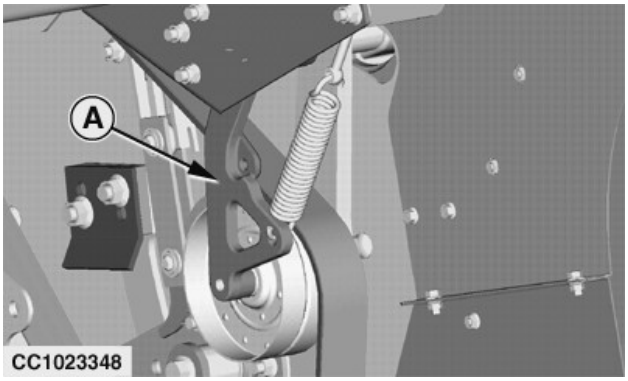

CC1023348—UN—19SEP03

A—Idler

3. Release spring tension on idler (A)

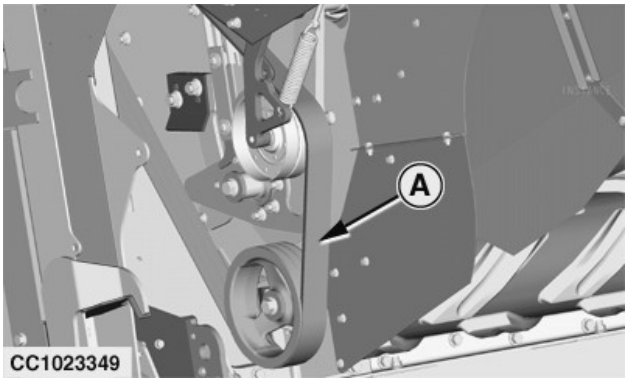

CC1023349—UN—19SEP03

A—Drive belt

4. Remove drive belt (A) from sheaves.
5. Pull out belt (A).
6. Install new belt (A).

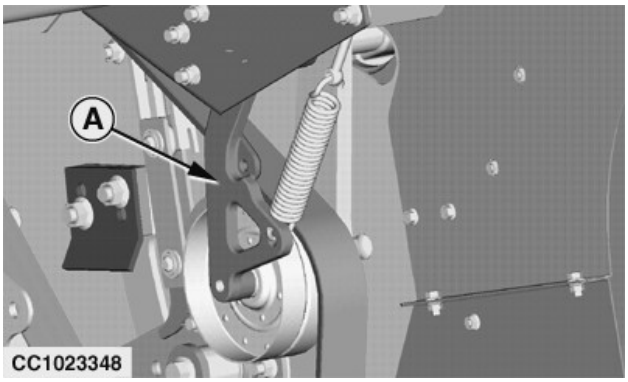

CC1023348—UN—19SEP03

A—Spring-loaded idler

7. Adjust roll conditioner drive belt tension. See “Adjusting Roll Conditioner Drive Belt Tension” in this section.

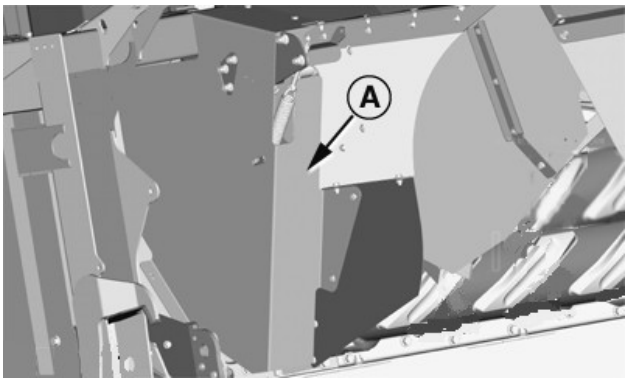

E55794—UN—11JUN08

A—Shield

8. Install left-hand side shield (A).

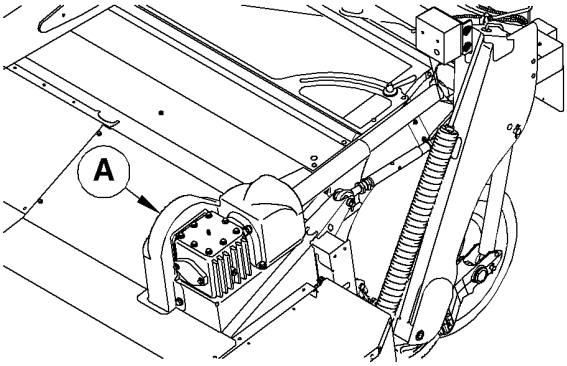

E55098—UN—04MAY07

9. Install shield (A).

OUO6085,0000751-19-03JUN08

Adjusting Roll Conditioner Drive Belt Tension

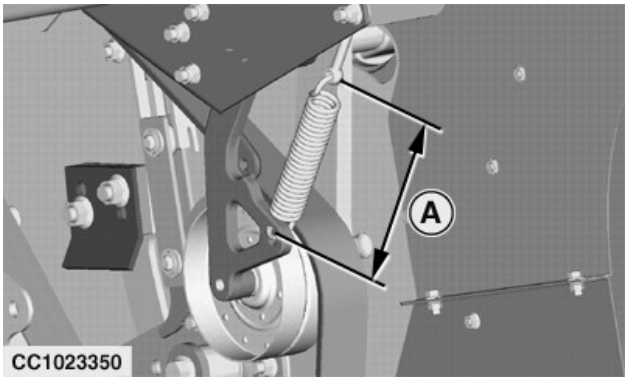

CC1023350—UN—19SEP03

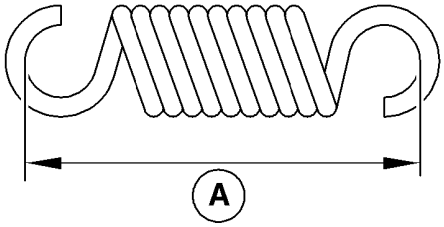

CC1022283—UN—03DEC02

A—Spring length

Adjust spring length (A) to 245 mm (9.65 in.) (inside-of-hook to inside-of-hook).

OUCC006,0000A29-19-13JUN06

Synchronizing Rolls

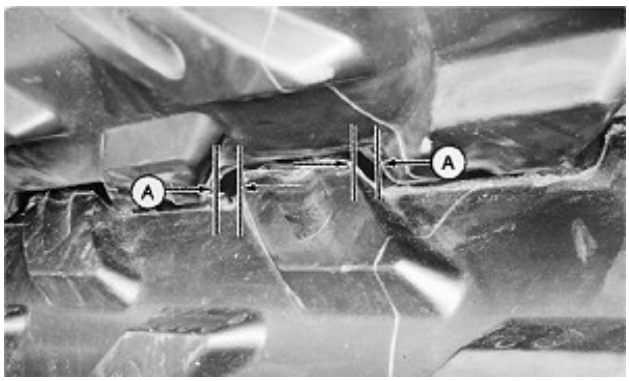

E38035—UN—14APR94

A—Clearance

1. Lower machine to the ground.
2. Check clearances (A).

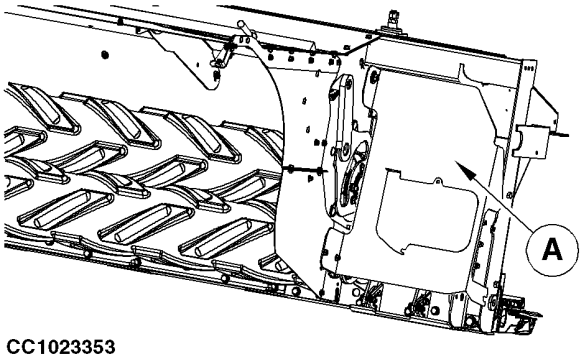

CC1023353

CC1023353—UN—19SEP03

A—Shield

3. If the clearances are not correct, remove right-hand side shield (A).

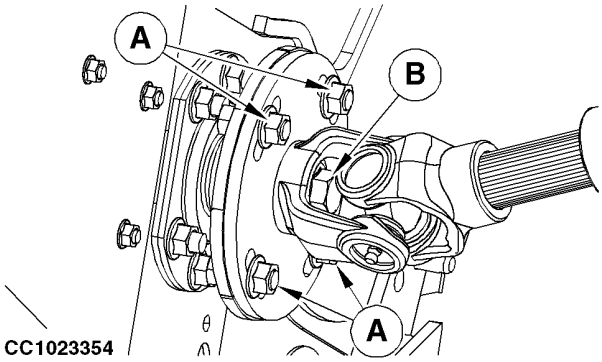

CC1023354

CC1023354—UN—19SEP03

A—Nut (self-locking type) (4 used)
B—Cap Screw

4. Remove four nuts (A) and cap screws.
5. Wedge a pry bar between upper and lower roll driveline.
6. Loosen cap screw (B) using special tool (see “Wrench” in “Attachments” Section).

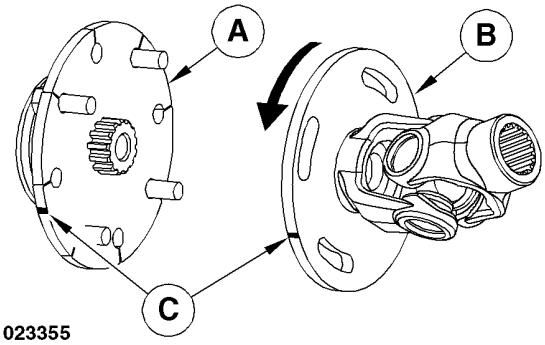

CC1023355

CC1023355—UN—19SEP03

A—Driven Plate
B—Driveline Flange
C—Scribed Mark

7. Hold driven plate (A) and rotate driveline flange (B) counterclockwise until the roll lugs/flutes contact.
8. Scribe a mark (C) across mating edges of the driveline flange (B) and driven plate (A).

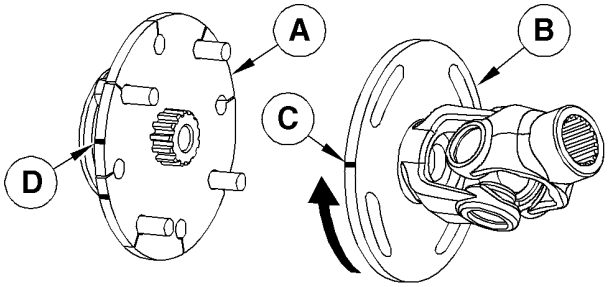

CC1023356

CC1023356—UN—19SEP03

A—Driven Plate
B—Driveline Flange
C—Mark
D—Scribed Mark

9. Hold driven plate (A) and rotate driveline flange (B) clockwise until roll lugs/flutes contact.

NOTE: If driveline flange reaches the end of its slot before lugs contact, move driven plate (A) by one tooth and repeat procedure.

10. Scribe a mark (D) on the mating edge of driven plate (A), opposite mark (C) on the driveline flange (B).

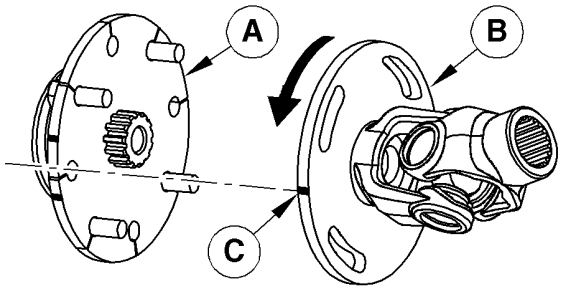

CC1023357

CC1023357—UN—30SEP03

A—Driven Plate
B—Driveline Flange
C—Scribed Mark

11. Hold driven plate (A) and rotate driveline flange (B) counterclockwise until scribe mark (C) is halfway between marks made on the mating edge of driven plate.

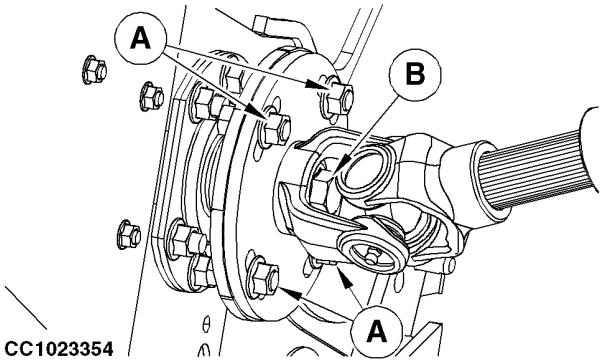

CC1023354

CC1023354—UN—19SEP03

A—Nut (self-locking type) (4 used)
B—Cap screw

12. Install driveline in reverse order of removal using the following special instructions:

IMPORTANT: Only use John Deere original nuts.

- **Apply NEVER-SEEZ® lubricant to splines of the roll shaft.**
- **Apply multipurpose grease to telescoping part of shaft.**

IMPORTANT: Driveline must slide freely.

- **Coat threads of the cap screw (B) and nuts (A) with LOCTITE® 242.**

GW44282,00006EF-19-28OCT16

Removing Disks

TS268—UN—23AUG88

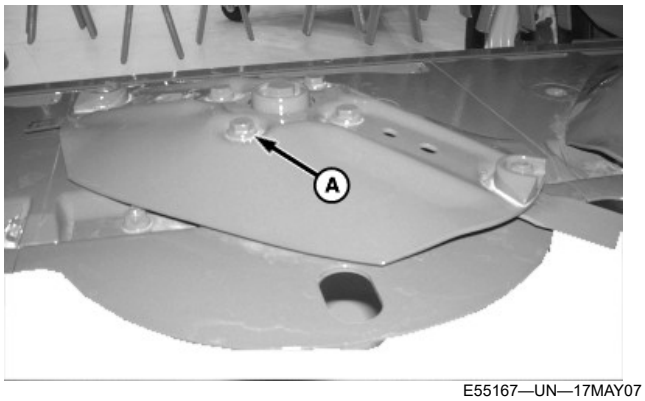

E55167—UN—17MAY07

A—Cap Screw

1. Raise machine and engage lift cylinder lock.
2. Raise front doors.

CAUTION: Knives have two cutting edges. Be careful when working around the knives. Knives are sharp and can cause serious injury. Wear gloves when handling knives and disks.

3. To avoid serious injury, rotate both knives on all disks, so they are positioned UNDER the disks.
4. Put a piece of wood between two disks.

NOTE: If removing left-hand end disk, refer to "Replacing Left-Hand End Converging Disk Driver" in this section. If removing right-hand end disk, refer to "Replacing Right-Hand End Converging Disk Driver" in this section.

5. Remove four cap screws (A).
6. Remove disk from cutterbar.

OUO6085,0000758-19-03OCT16

NEVER-SEEZ is a trademark of Emhart Chemical Group

LOCTITE is a trademark of Loctite Corp.

Installing and Synchronizing Disks

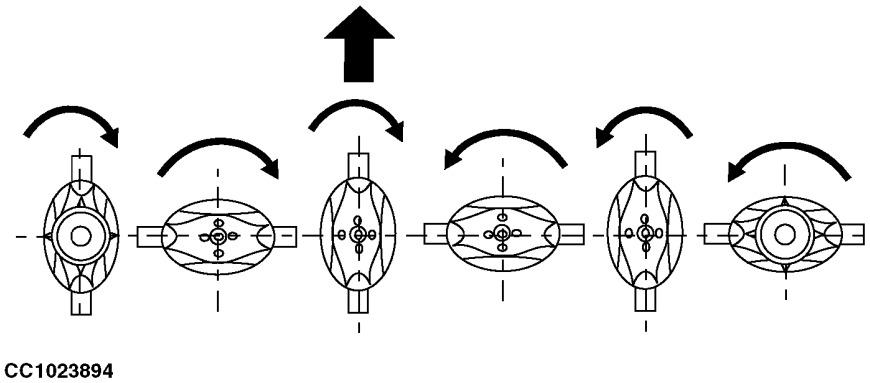

CC1023894—UN—05DEC03

830 Mower-Conditioner

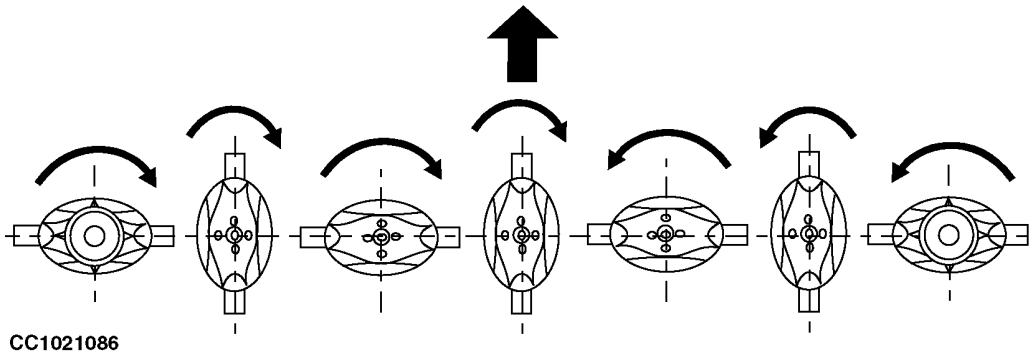

CC1021086—UN—11MAR02

835 Mower-Conditioner

IMPORTANT: Each disk must be installed at right angles to the adjoining disk.

NOTE: Disk life can be extended by moving disk to a location of opposite rotation.

1. Clean bearing surface of foreign material. Install disk in its original position.

IMPORTANT: Disk-to-driver cap screws are treated with thread-locking compound and can be used up to five times. Replace with the John Deere cap screw specified for this application.

2. Fasten with four locking cap screws. Tighten cap screws to specifications.

Specification	
Locking Cap Screws—Torque	150 N·m (110 lb-ft)

Replace locking cap screws after removing and installing five times.

3. Remove wood block.
4. Rotate disks several times by hand to check synchronization. Make sure there is no interference between knives.
5. Lower front doors.

OUO6085,0000913-19-30JUN08

Removing Knives

TS268—UN—23AUG88

CAUTION: Knives have two cutting edges. Be careful when working around the knives. Knives are sharp and can cause serious injury. Wear gloves when handling knives.

1. To avoid serious injury, rotate both knives on all disks, so they are positioned UNDER the disks.
2. Clean area around special lock nut (A).

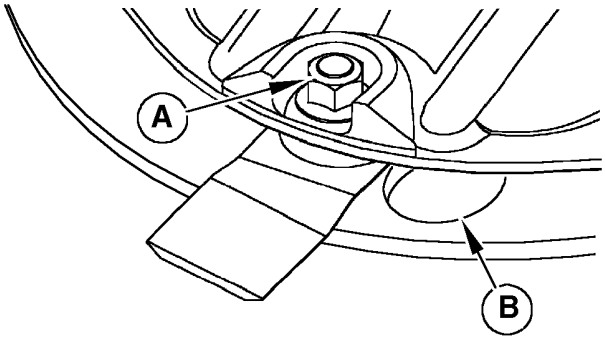

CC017218

CC017218—UN—18FEB00

A—Lock Nut
B—Hole

3. Rotate disk so knife bolt is over hole (B).
4. Put a piece of wood between two disks to prevent them from turning while loosening knife bolt.
5. Remove knife bolt and nut with socket wrench. Remove knife. If knife bolt is tight, move wear shield toward center of disk using a hammer.
6. Check knife, bolt, and nut before reinstalling. (See “Checking Knives”, “Checking Knife Bolt Wear” and “Checking Knife Lock Nut Wear” in this section.)

OUCC006,00007C7-19-13JUN06

Understanding Direction of Knife Rotation

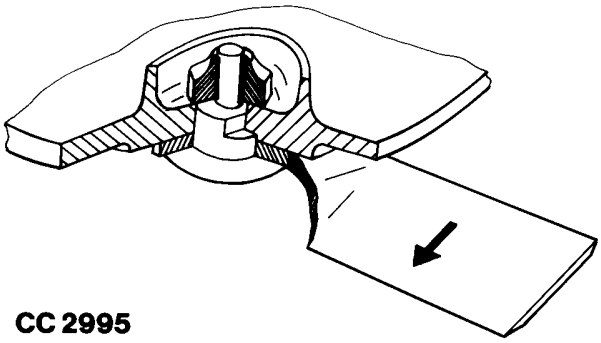

CC 2995

CC2995—UN—07FEB95

The knives are twisted. An arrow is engraved on each knife to indicate direction of rotation. When worn, knives can be turned over and reinstalled on the same disk and in the same location to offer a new cutting edge.

When the second cutting edge is also blunt, replace knife. Install new knife with chamfered edge facing the ground.

PP98408,0000353-19-12NOV09

Installing Knives

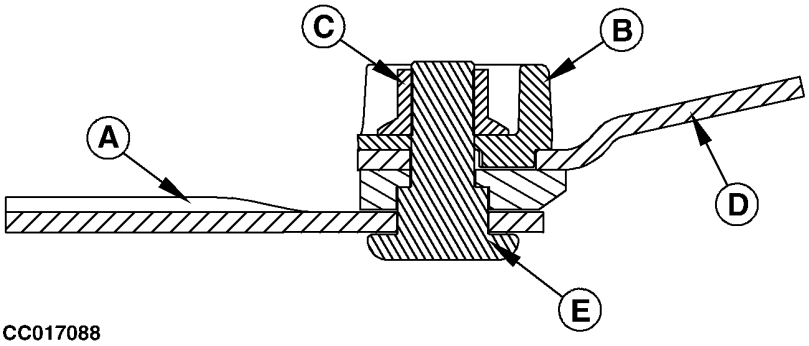

CC017088

CC017088—UN—15FEB00

A—Knife
B—Wear Shield
C—Lock Nut
D—Disk
E—Knife Bolt

CAUTION: If nut is installed incorrectly, it cannot be tightened sufficiently, which may lead to loss of knife and bolt during operation.

IMPORTANT: Always use genuine John Deere knives. Replace each special knife bolt and special lock nut when it has been removed and reinstalled five times.

1. Clean mounting area.
2. Install knife (A) as follows:

- **New knife**: Install knife with bevel side of cutting edge facing towards ground.
- **Reversing worn knife**: When the initial cutting edge is worn (see ”Checking Knife Wear” in this section), the knife may be reversed on the same disk at the same location with bevel side of cutting edge facing upwards.

3. Fasten knife (A) and shield (B) with knife bolt (E) and lock nut (C). Make sure knife bolt is correctly seated in disk hex.
4. Tighten lock nut (C) to specifications.

Specification	
Knife Bolt Lock Nut—Torque	150 N·m (110 lb-ft)

5. Make sure knife rotates freely on the bolt.

CC03745,0000365-19-16NOV09

Checking Knives

CAUTION: Replace cracked, broken, or distorted knives immediately. Failure to do so may lead to loss of knife and bolt, or cause damage to cutterbar during operation.

Check knives before operating machine. Operator safety and mowing quality depend on careful inspection of knives.

Uneven ground and knives striking against obstacles may cause cracks and distortion of knives. Replace damaged knives immediately.

CC03745,0000366-19-14MAR02

Checking Knife Wear

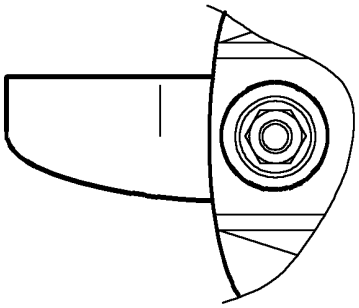

CC007707

CC007707—UN—02OCT96

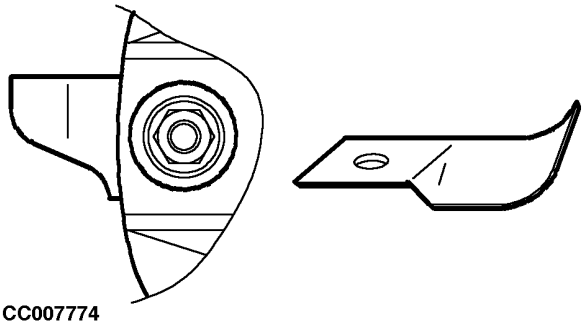

CC007774

CC007774—UN—02OCT96

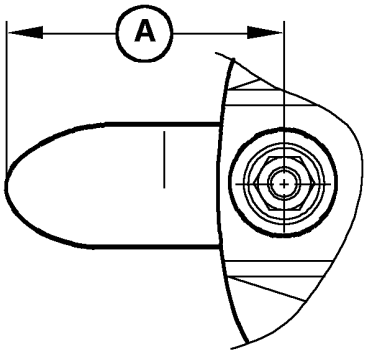

CC007708

CC007708—UN—02OCT96

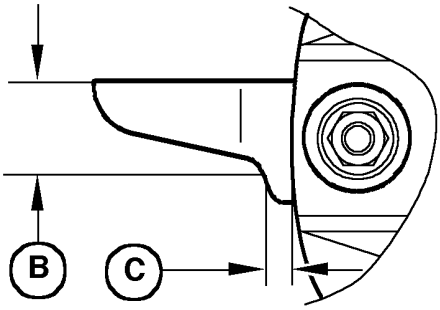

CC007710

CC007710—UN—02OCT96

A—65 mm (2.60 in.)
B—34 mm (1.35 in.)
C—10 mm (0.40 in.)

Turn over knife:

When the cutting edge is worn on one side and the conditions described below are not met.

Always turn over both knives of a disk on the same location.

Replace knife:

When it is cracked, broken or distorted.

IMPORTANT: Never straighten bent knives.

When knife length (A) is below 65 mm (2.60 in.).

When the width (B) of the knife, measured at a distance

(C) of 10 mm (0.40 in.) from the edge of the disk is less than 34 mm (1.35 in.).

CC03745,0000367-19-14MAR02

Checking Knife Fitting Hole

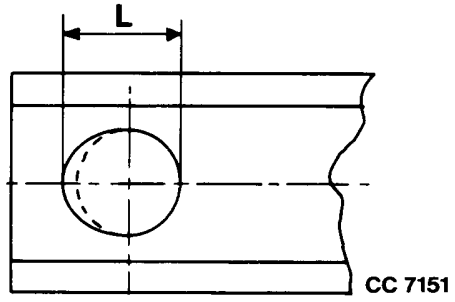

CC7151—UN—07FEB95

L—Initial diameter + 2 mm (0.08 in.); the knife must be replaced

A knife must be replaced if its fitting hole becomes elongated by 2 mm (0.08 in.) or more as illustrated.

CC03745,0000368-19-14MAR02

Checking Knife Hardware

Frequently check knife hardware especially:

- At the beginning of the season.
- Every time before starting work.
- Immediately after striking an obstacle.
- When replacing knives.

Refer to “Checking Knife Bolt Wear” and “Checking Knife Lock Nut Wear” in this Section.

CC03745,0000369-19-14MAR02

Checking Knife Bolt Wear

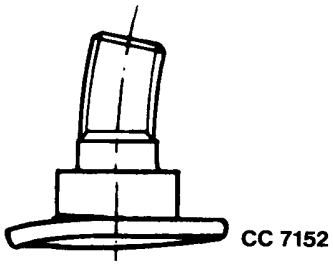

CC7152—UN—07FEB95

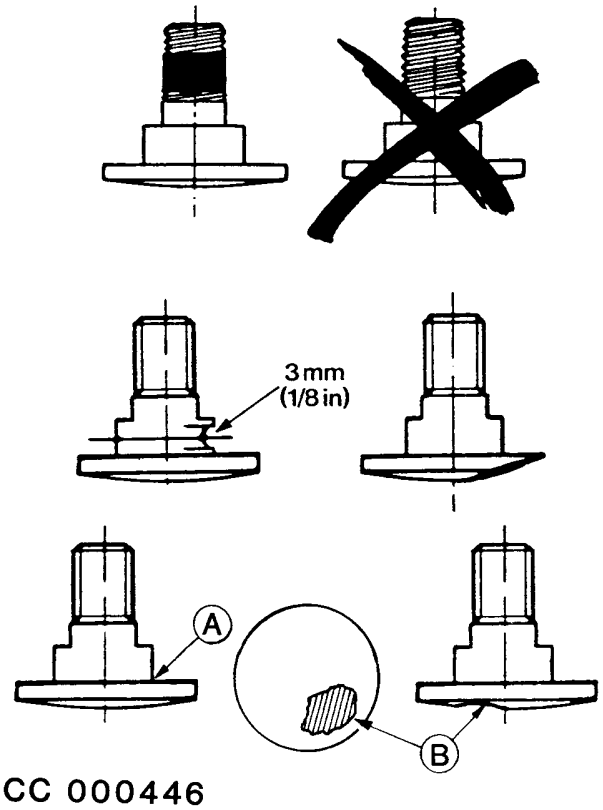

CC000446—UN—07FEB95

A—Head/Shank Interface
B—Interference

IMPORTANT: Always use genuine John Deere special knife bolts.

Replace bolts:

After they have been removed and reinstalled five times.

If they are visibly distorted.

If thread locking compound is no longer serviceable or has become inefficient due to water, oil, earth or mud.

When head has worn flush with bearing surface of knife.

When diameter of bolt neck has worn by 3 mm (0.12 in.).

If cracked. Check bolt head/shank interface (A). Examine bolt threads.

If bolt is damaged due to interference (B). Correct interference.

CC03745,000036A-19-14MAR02

Checking Knife Lock Nut Wear

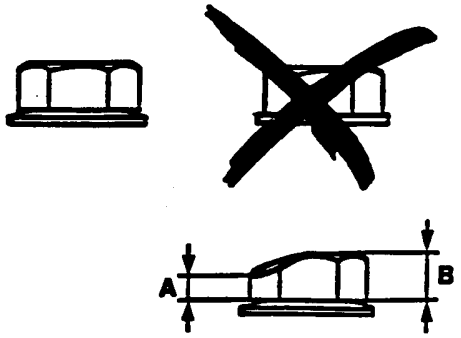

E37254—UN—07JUL93

A—Unworn Height
B—Total Height

IMPORTANT: Always use genuine John Deere special knife lock nuts.

Always replace lock nuts when they have been removed and reinstalled five times.

Replace the lock nut if washer loses its elasticity or has become separated from the nut.

Replace when height (A) on the worn side of the knife lock nut is less than half the total height (B).

CC03745,000036B-19-14MAR02

Replacing Wear Shield on Knife Bolt

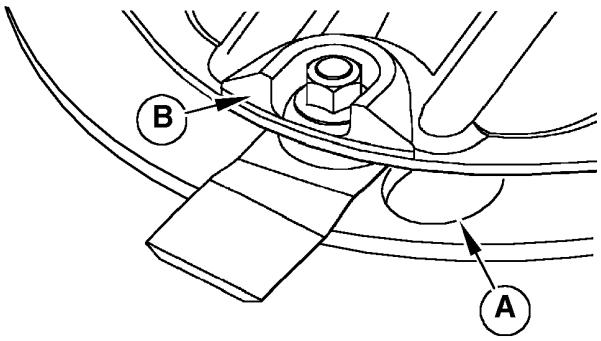

CC017219

CC017219—UN—18FEB00

A—Hole
B—Wear Shield

1. Rotate disk so knife bolt is over hole (A). Remove knife. (See “Removing Knives” in this section.)
2. Remove wear shield (B) using a brass drift or wood block and hammer.
3. Check disk, knife, special bolt and special lock nut before installing new wear shield. Replace as necessary. (See “Checking Knives”, “Checking Knife Bolt Wear” and “Checking Knife Lock Nut Wear” in this section.)

NOTE: Wear shield life can be extended by moving shield to a location of opposite rotation.

4. Install new wear shield.
5. Install knife and hardware. (See “Installing Knives” in this section.)

OUCC006,00007C4-19-24OCT02

Replacing Disk Driver

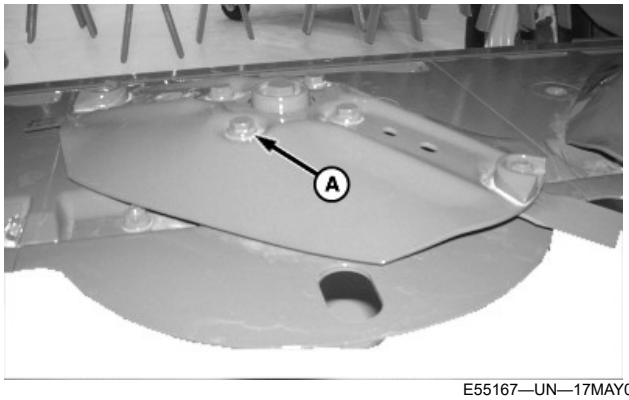

E55167—UN—17MAY07

A—Cap Screw (4 used)

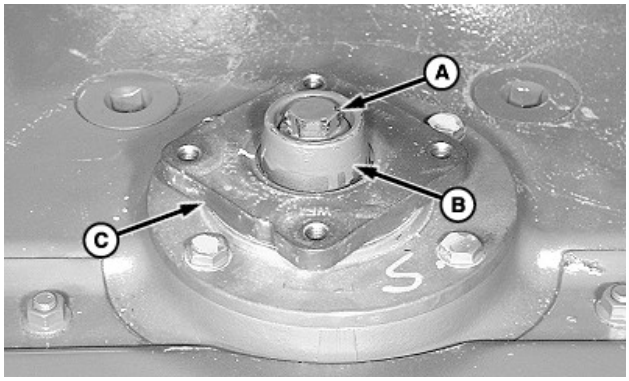

E52475—UN—18JUN03

A—Cap Screw
B—Special Washer
C—Disk Driver

1. Remove disk. (See “Removing Disks” in this section.)
2. Remove center cap screw (A), special washer (B) and disk driver (C).
3. If spline has been sheared, remove loose pieces of spline.

IMPORTANT: It is critical that mating surfaces of the bearing, driver, yoke, and hardened washer be free of dirt and crop before installing cap screw. If these areas are not thoroughly cleaned, the cap screw can come loose and cause cutterbar failure.

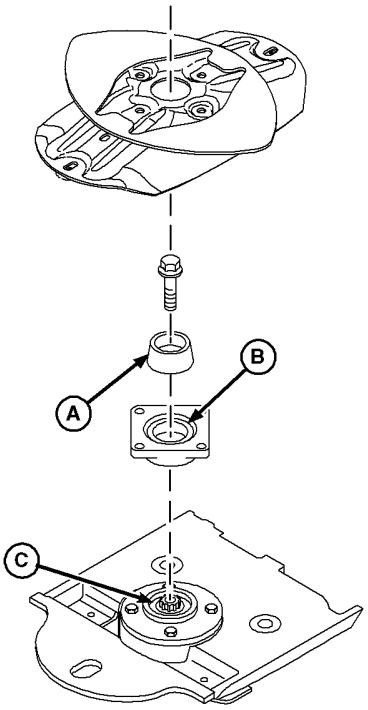

E55121—UN—08MAY07

A—Special Washer
B—Driver
C—Top of Bearing

4. Clean the following areas when replacing disk driver:
   - Special washer (A).
   - Top of driver (area B).
   - Bottom of driver (B).
   - Top of bearing (C).

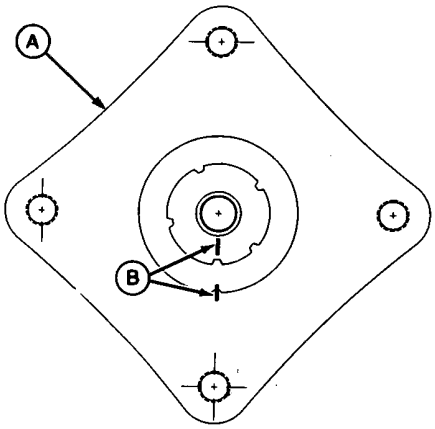

E44180—UN—25JUL97

A—Driver
B—Timing Marks

5. Align timing marks (B) and install new driver (A) on pinion shaft.

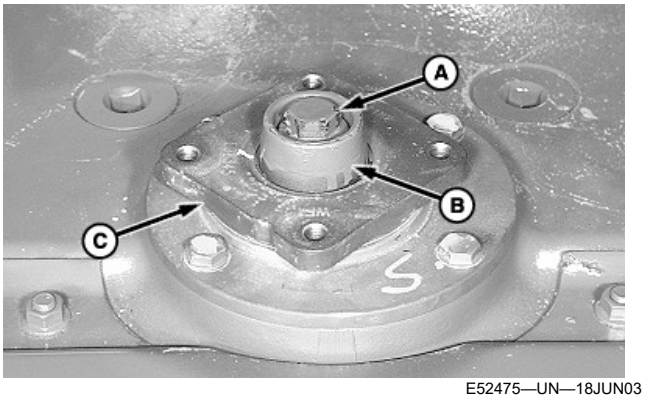

E52475—UN—18JUN03

A—Cap Screw
B—Special Washer
C—Driver

6. Align timing mark on special washer (B) with mark on driver (C). Install washer.

IMPORTANT: To avoid machine damage, use new center cap screw treated with thread-locking compound.

Lubricate cap screw with light oil before installation. Failure to lubricate could allow cap screw to come loose and cause machine damage.

7. Lubricate cap screw (A) with a light oil. Install and tighten to specifications.

Specification

Disk Driver Cap Screw—Torque. . . . . 340 N·m (250 lb-ft)

8. Install disk in original position. (See “Installing and Synchronizing Disks” in this section.)

OUO6085,0000754-19-03JUN08

Replacing Left-Hand End Converging Disk Driver

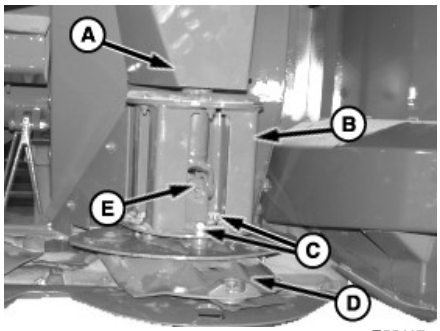

E55117—UN—01MAY07

A—Shield
B—Converging Drum
C—Cap Screw
D—Disk
E—Cutterbar Driveline

1. Raise curtain to access disk drivers (see “Raising

Curtains” in “Operating the Mower-Conditioner” section).

2. Remove shield (A).
3. Put a wood block between two disks.
4. Remove cap screws (C).
5. Remove driveline (E) and converging drum (B).
6. Remove disk (D).
7. Remove cap screw and special washer (A).

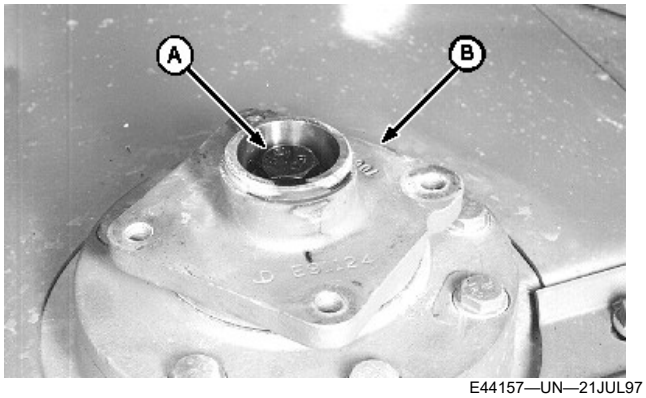

E44157—UN—21JUL97

A—Cap Screw and Washer
B—Disk Driver

8. Remove disk driver (B).
9. If spline has been sheared, remove loose pieces of spline.

IMPORTANT: It is critical that mating surfaces of the bearing, driver, yoke, and driver retainer washer be free of dirt and crop before installing special hardened cap screw. If these areas are not thoroughly cleaned, the special hardened cap screw can loosen and cause cutterbar failure.

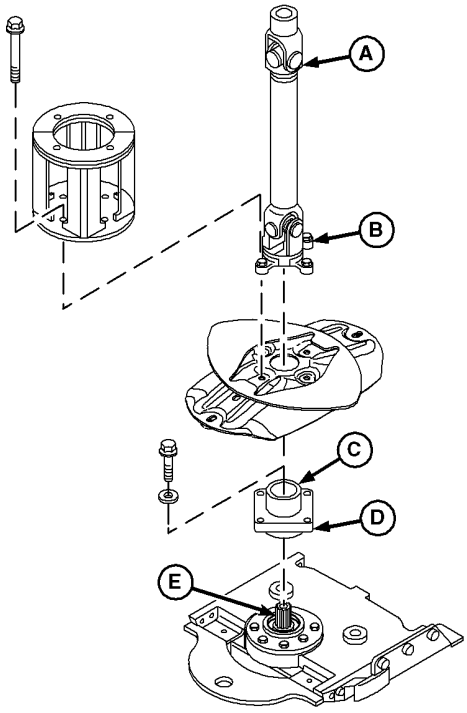

E55122—UN—08MAY07

A—Yoke, Inside
B—Yoke, Bottom
C—Driver, Top
D—Driver, Bottom
E—Bearing, Top

10. Clean the following areas before installing disk driver:
    - Inside yoke (A).
    - Bottom of yoke (B) which seats on disk.
    - Top of driver (C) where yoke and disk seat.
    - Bottom of driver (D).
    - Top of bearing (E).

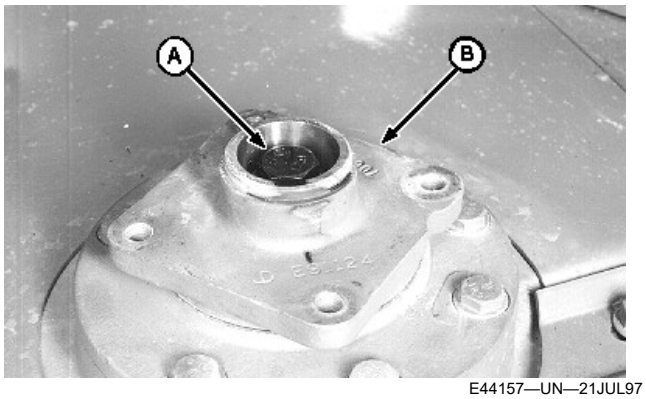

E44157—UN—21JUL97

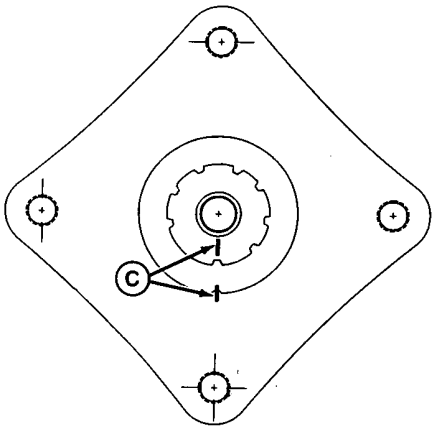

E44407—UN—30SEP97

A—Cap Screw and Washer
B—Disk Driver
C—Timing Marks

11. Align timing marks (C) and install new driver (B) on pinion shaft.
12. Align timing mark on special washer (A) with mark on driver. Install washer.

IMPORTANT: To avoid machine damage, use new center cap screw treated with thread-locking compound.

Replace the special hardened cap screw with genuine John Deere part specified for this application.

Lubricate cap screw with light oil before installation. Failure to lubricate could allow cap screw to come loose and cause machine damage.

13. Lubricate special cap screw (A) with a light oil. Install and tighten to specifications.

Specification

Converging Disk Driver Cap
Screws—Torque. . . . . 340 N·m (250 lb-ft)

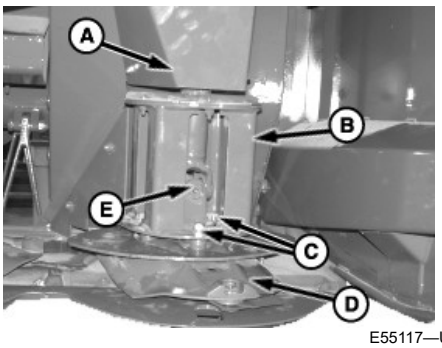

E55117—UN—01MAY07

A—Shield
B—Converging Drum
C—Cap Screw
D—Disk
E—Cutterbar Driveline

14. Place disk (D) on driver in original position (see “Installing and Synchronizing Disks” in this section).
15. Lubricate gear case output shaft with multipurpose grease.
16. Insert cutterbar driveline through middle of converging drum (B). Slide splined yoke of driveline (E) onto splined shaft of gear case.

IMPORTANT: Disk-to-driver cap screws are treated with thread-locking compound and can be used up to five times. Replace with the John Deere cap screw specified for this application.

17. Fasten with four locking cap screws. Tighten cap screws to specifications.

Specification

Disk-to-Driver Cap
Screws—Torque. . . . . 150 N·m (110 lb-ft)

Replace locking cap screws after removing and installing five times.

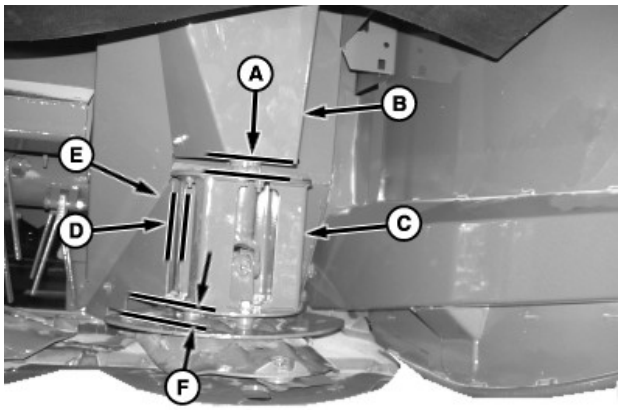

E55118—UN—01MAY07

A—Clearance
B—Upper Shield
C—Converging Drum
D—Clearance
E—Stripper Plate
F—Clearance

18. Install upper shield (B). Make sure clearance (A) between shield and top of converging drum is within specification.

Specification

Shield-to-Converging Drum
(A)—Clearance. . . . . 5—8 mm (0.197—0.315 in.)

19. Remove wood block.
20. Rotate disks by hand until highest point is in line with stripper plate (E). Make sure clearance (D) and clearance (F) between crop accelerators and bottom of stripper are within specification.

Specification	
Stripper-to-Converging Drum (D)—Clearance	1—6 mm (0.039—0.236 in.)

Specification	
Stripper-to-Accelerator (F)—Clearance	5—8 mm (0.197—0.315 in.)

21. Rotate disks several times by hand to check synchronization. Make sure there is no interference between knives.
22. Lower curtains.

OUO6085,0000755-19-04AUG10

Replacing Right-Hand End Converging Disk Driver

1. Raise curtain to access disk drivers (see ”Raising Curtains” in ”Operating the Mower-Conditioner” section).

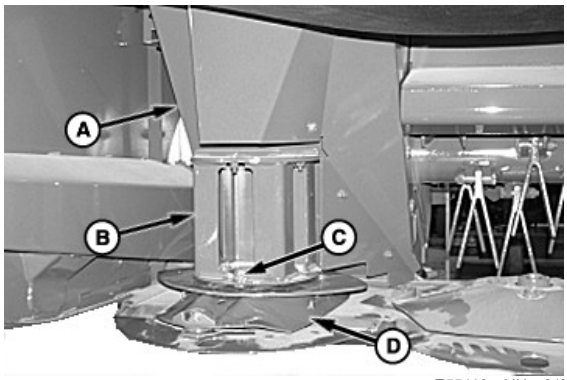

E55119—UN—01MAY07

A—Shield
B—Drum
C—Cap Screw
D—Disk

2. Remove shield (A).
3. Put a wood block between two disks.
4. Remove cap screws (C), converging drum (B) and disk (D).

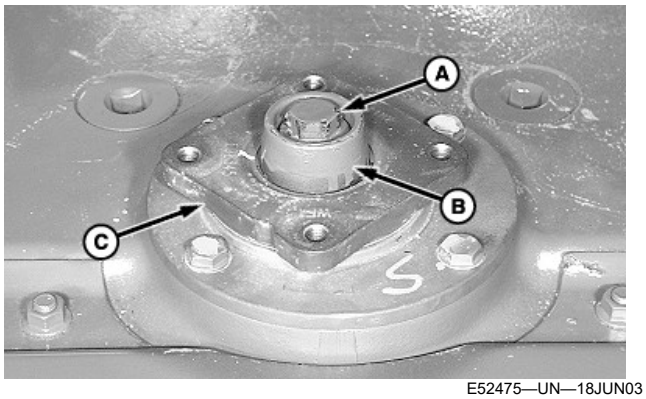

E52475—UN—18JUN03

A—Cap Screw
B—Special Washer
C—Disk Driver

5. Remove cap screw (A) and special washer (B).
6. Remove disk driver (C).
7. If spline has been sheared, remove loose pieces of spline.

IMPORTANT: It is critical that mating surfaces of the bearing, driver, yoke, and hardened washer be free of dirt and crop before installing cap screw. If these areas are not thoroughly cleaned, the cap screw can come loose and cause cutterbar failure.

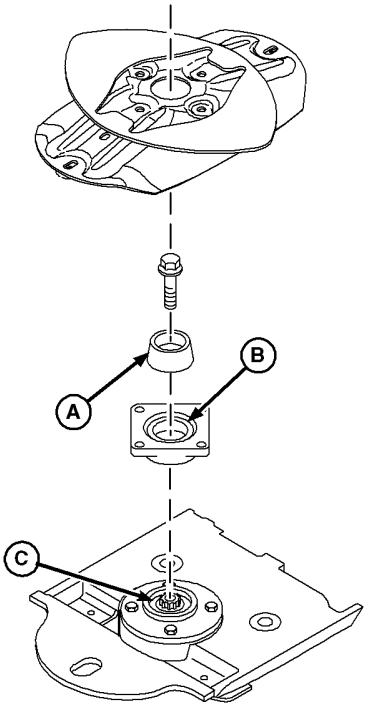

E55121—UN—08MAY07

A—Special washer
B—Top of driver
C—Bottom of driver
D—Top of bearing

8. Clean the following areas when replacing disk driver (other than left-hand end):
   - Special washer (A).
   - Top of driver (B) where disk seats.
   - Bottom of driver (C).
   - Top of bearing (D).

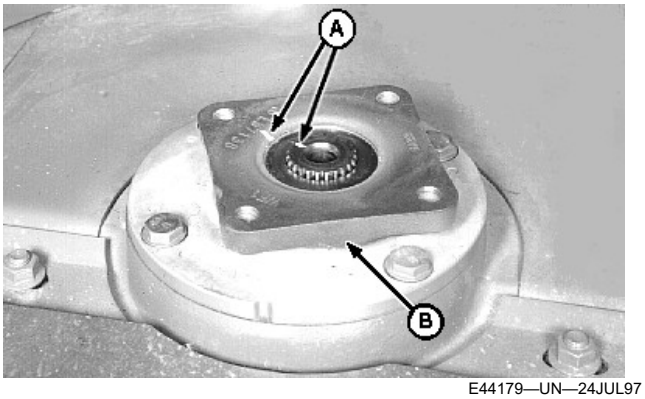

E44179—UN—24JUL97

A—Timing marks
B—Driver

9. Align timing marks (A) and install new driver (B) on pinion shaft.

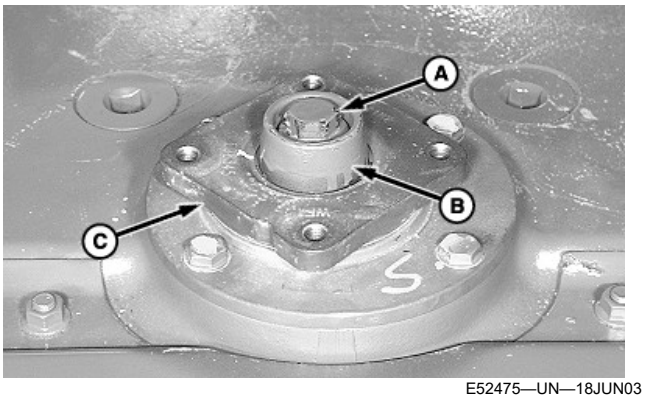

E52475—UN—18JUN03

A—Cap screw
B—Special washer
C—Disk driver

10. Align timing mark on special washer (A) with mark on driver (C). Install washer.

IMPORTANT: To avoid machine damage, use new center cap screw treated with thread-locking compound.

Replace the special hardened cap screw with genuine John Deere part specified for this application.

Lubricate cap screw with light oil before installation. Failure to lubricate could allow cap screw to come loose and cause machine damage.

11. Lubricate cap screw (A) with a light oil. Install and tighten to specifications.

Specification

Disk Driver Cap Screw—Torque. . . . . 340 N·m (250 lb-ft)

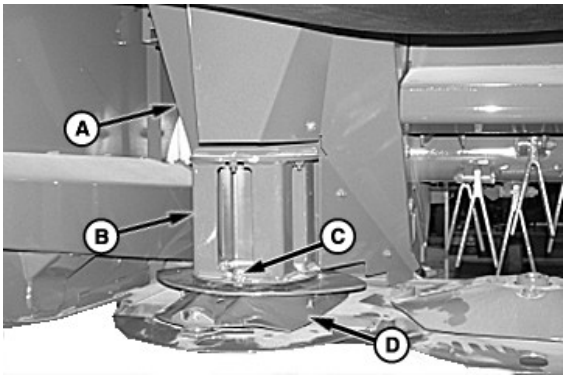

E55119—UN—01MAY07

A—Shield
B—Drum
C—Cap Screw
D—Disk

12. Place disk (D) on driver in original position. (See ”Installing and Synchronizing Disks” in this section.)

IMPORTANT: Disk-to-driver cap screws are treated with thread-locking compound and can be used up to five times. Replace with the John Deere cap screw specified for this application.

13. Place converging drum (B) on disk, align mounting holes and install four locking cap screws (C). Tighten cap screws to specifications.

Specification

Disk-to-Driver Cap Screws—Torque. . . . . 150 N·m (110 lb-ft)

Replace locking cap screws after removing and installing five times.

14. Install upper shield (E). Make sure clearance (D) between shield and top of converging drum is within specification.

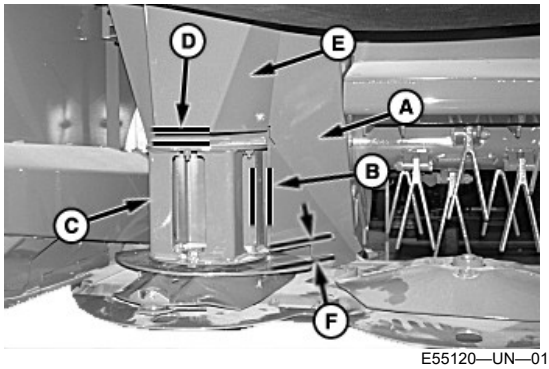

E55120—UN—01MAY07

A—Stripper plate
B—Clearance
C—Converging drum
D—Clearance
E—Upper shield
F—Clearance

Specification

Shield-to-Converging Drum (D)
——Clearance. . . . . 5—8 mm
(0.197—0.315 in.)

15. Remove wood block.
16. Rotate disks by hand until highest point is in line with stripper plate (A). Make sure clearance (B) and clearance between crop accelerators and bottom of stripper (F) are within specification.

Specification

Stripper-to-Converging Drum
(B)——Clearance. . . . . 1—6 mm
(0.039—0.236 in.)

Specification

Stripper-to-Accelerator (F)
——Clearance. . . . . 5—8 mm
(0.197—0.315 in.)

17. Rotate disks several times by hand to check synchronization. Make sure there is no interference between knives.
18. Lower curtains.

OUO6085,0000233-19-04AUG10

Replacing Rotor Tines

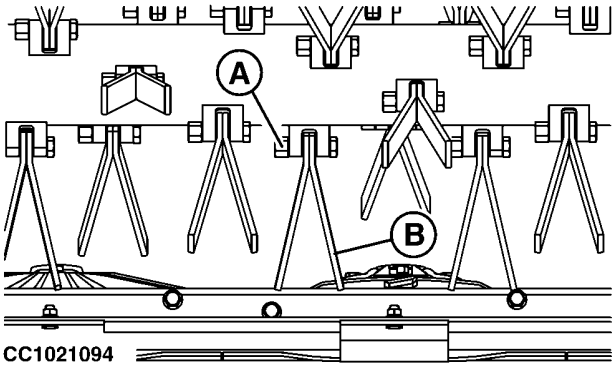

CC1021094—UN—11MAR02

A—Bolt
B—Tine

IMPORTANT: Do not operate machine if tines are missing. Rotor will be out of balance causing vibration and machine damage.

1. Remove bolts (A).

NOTE: Bolt and lock nut should be replaced after maximum 5 removals.

2. Check screw and lock nut for damage. Replace if necessary.
3. Install new tine (B). Fasten bolts (A).

OUO6085,0000234-19-14JUN06

Service Tires Safely

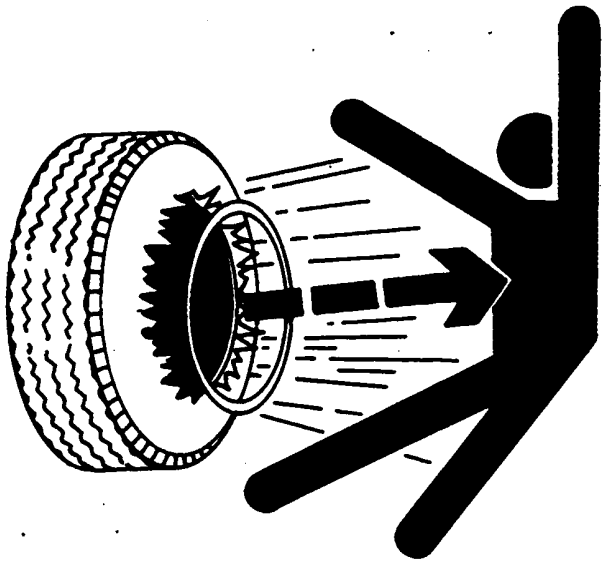

TS211—UN—15APR13

CAUTION: Explosive separation of a tire and rim parts can cause serious injury or death.

Do not attempt to mount a tire unless you have the proper equipment and experience to perform the job.

Always maintain the correct tire pressure. Do not inflate the tires above the recommended pressure.

Never weld or heat a wheel and tire assembly. The heat can cause an increase in air pressure resulting in a tire explosion. Welding can structurally weaken or deform the wheel.

When inflating tires, use a clip-on chuck and extension hose long enough to allow you to stand to one side and NOT in front of or over the tire assembly. Use a safety cage if available.

Check wheels for low pressure, cuts, bubbles, damaged rims or missing lug bolts and nuts.

DX,RIM1-19-27OCT08

Changing Wheel

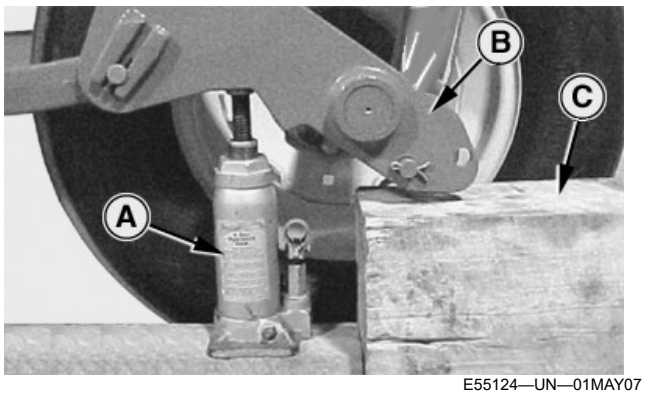

E55124—UN—01MAY07

A—Floor jack
B—Wheel arm
C—Wood block

1. Raise machine and engage lift cylinder stop.
2. Install floor jack (A) under wheel arm (B) as shown.
3. Install wood block (C) under wheel arm (B) as shown.
4. Raise frame with floor jack (A).
5. Remove wheel.

IMPORTANT: Wheels should be installed with valve stems to the inside. Incorrect assembly can cause wheel hardware to loosen.

Check wheel nut torque after the first 10 hours of use.

6. Install wheel with valve stem to the inside. Install and tighten nuts to specifications.

Specification	
Wheel Nuts—Torque	115 N·m (85 lb-ft)

7. Remove wood block (C).
8. Lower floor jack (A) and remove it.
9. Check tire inflation (See “Preparing the Mower-Conditioner” section).
10. Disengage lift cylinder stop.

OUO6085,0000756-19-03JUN08

Storing Mower-Conditioner (End of Season)

1. Put mower-conditioner in a dry place.
2. Clean mower-conditioner thoroughly. Trash and dirt will draw moisture and cause rust.
3. Thoroughly lubricate machine. (See “Lubrication and Maintenance” section.)
4. Check condition of knives; reverse or replace as necessary.
5. Remove tension from all drive belts.
6. Paint all parts where necessary.
7. Put blocking under the wheel supports, taking load off tires. DO NOT DEFLATE TIRES. If exposed, put covers over tires to protect them from light, grease, and oil.
8. List replacement parts needed and order them early.
9. Carefully check hydraulic hoses. Change any damaged hydraulic hoses.
10. Store machine in a dry sheltered place.

CC03745,0000306-19-19DEC01

Removing Mower-Conditioner from Storage (Beginning of Season)

1. Review operator's manual and check adjustments.
2. Lubricate complete machine. (See “Lubrication and Maintenance” section.)
3. Drain and refill all gear cases. (See “Lubrication and Maintenance” section.)
4. Adjust all drive belt tensions (See “Service” section).
5. Check tire inflation.
6. Check all hardware for tightness.
7. If any major moving parts have been replaced, make sure they run properly.

OUCC006,00007B5-19-11OCT02

Specification for 830 Mower-Conditioner

Tractor Recommended

Power at PTO	540 rpm 52—60 kW (70—81 hp) 1000 rpm 52—112 kW (70—150 hp)
Hydraulic pressure required	15 500 kPa (155 bar) (2250 psi)
Power Take-Off	540 or 1000 rpm

Cutting Specifications

Cutting Width, m (ft)	3.00 m (9 ft 9 in)
Cutting Height, mm (in)	20—95 mm (0.8—3.7 in)

Dimensions

Machine Width, m (ft)	3.00 m (9 ft-9 in)
Machine Length, m (ft)	6.87 m (22 ft 6.5 in)
Tires	11L15 31/13.5-15

Weight

With Urethane Roll Conditioner, kg (lb)	2802 kg (6177 lb) (Swivel) 2519 kg (5553 lb) (Equal Angle)
With Impeller Conditioner, kg (lb)	2659 kg (5826 lb) (Swivel) 2376 kg (5238 lb) (Equal Angle)
With Steel Roll Conditioner, kg (lb)	2978 kg (6565 lb) (Swivel) 2595 kg (5941 lb) (Equal Angle)

Impeller Conditioner

Impeller Width, mm (ft)	1878 mm (6 ft 1.9 in)
Turn-Circle Diameter, mm (in)	594 mm (23-25/64 in)
Number of V-Tines	45
Impeller Speeds	630 rpm 870 rpm
Drive Type	3 V Powerband Belts and Sheaves
Conditioner Hood	Adjustable

Roll Conditioner

Roll Width, mm (ft)	1878 mm (6 ft 1.9 in)
Roll Diameter, mm (in)	254 mm (10 in)
Material	Urethane
Roll Speed	655 rpm
Drive	3 V Powerband Belts
Roll Spacing	Adjustable
Roll Pressure	Adjustable
Roll Drive Gear Case Oil Capacity	0.6 L (1.3 pt)

Steel Roll

Width, cm (in)	235 cm (92.7 in)
Diameter, cm (in)	25.3 cm (9.96 in)
Material	Steel
Design	Intermeshing, Flutes
Speed	664
Drive	Telescoping Shaft
Windrow Width, m (in)	1.0-2.38 m (39—94 in)
Windrow Width with Wide Swath Kit, m (in)	Up to 2.24 m (88 in)
Roll Drive Gear Case Oil Capacity	0.6 L (1.3 pt)

Cutterbar

Cutterbar Type	Rotary disks
Number of Disks	6
Oil Capacity	7 L (1.85 gal)

Windrow Specifications

Windrow Width, mm (ft)	900—2000 mm (3—6 ft 6 in)
Windrow Width with Wide Swath Kit, m (in)	Up to 3.0 m (118 in)

Sound Level

Sound power level declaration in accordance with directive 98/37/EC and EN 1553 - Annex D; measurement method in accordance with EN ISO 3744	94 dB

GW44282,00006F0-19-28OCT16

Specification for 835 Mower-Conditioner

Tractor Recommended

Power at PTO	67—112 kW (90—150 hp)
Hydraulic pressure required	15 500 kPa (155 bar) (2250 psi)
Power Take-Off	1000 rpm

Cutting Specifications

Cutting Width	3.50 m (11 ft-6 in.)
Cutting Height	20—95 mm (0.8—3.7 in)

Dimensions

Machine Width	3.50 m (11 ft-6 in)
Machine Length	6.87 m (22 ft 6.5 in)
Tires	11L15 31/13.5-15

Weight

With Urethane Roll Conditioner, lb (kg)	2196 kg (6429 lb) (Swivel) 2633 kg (5805 lb) (Equal Angle)
With Impeller Conditioner, lb (kg)	2762 kg (6089 lb) (Swivel) 2479 kg (5465 lb) (Equal Angle)
With Steel Roll Conditioner, kg (lb)	2978 kg (6565 lb) (Swivel) 2695 kg (5941 lb) (Equal Angle)

Impeller Conditioner

Impeller Width	2355 mm (7 ft8.5 in)
Turn-Circle Diameter	594 mm (23-25/64 in)
Number of V-Tines	57
Impeller Speeds	630 rpm 870 rpm
Drive Type	3 V Powerband Belts and Sheaves
Conditioner Hood	Adjustable

Urethane Roll Conditioner

Roll Width	2355 mm (7 ft 0.5 in)
Roll Diameter	254 mm (10 in)
Roll Type	Urethane
Roll Speed	655 rpm
Drive type	3 V Powerband belts
Roll Spacing	Adjustable
Roll Pressure	Adjustable
Roll Drive Gear Case Oil Capacity	0.6 L (1.3 pt)

Steel Roll

Width, cm (in)	235 cm (92.7 in)
Diameter, cm (in)	25.3 cm (9.96 in)
Material	Steel
Design	Intermeshing, Flutes
Speed	664
Drive	Telescoping Shaft
Windrow Width, m (in)	1.0—2.38 m (39.94 in)
Windrow Width with Wide Swath Kit, m (in)	Up to 3.0 (118 in)
Roll Drive Gear Case Oil Capacity	0.6 L (1.3 pt)

Cutterbar

Cutterbar Type	Rotary Disks
Number of Disks	7
Oil Capacity	8 L (2.11 gal)

Windrow Specifications

Windrow Width	1.00—2.40 m (3 ft-3 in—7 ft-10 in)
Windrow width With Wide Swath Kit, m (in)	Up to 3.0 m (118 in)

Sound Level

Sound power level declaration in accordance with directive 98/37/EC and EN 1553 - Annex D; measurement method in accordance with EN ISO 3744 . . . . . 94 dB

GW44282,00006F1-19-28OCT16

Machine Weights

NOTE: Weights are with typical optional equipment.

Weights with other optional equipment will vary.

The maximum static vertical load for these machines is achieved with turn limiters installed.

Maximum Static Vertical Load on Tractor Drawbar—Specification

Specification

830 Mower-Conditioner—Weight. . . . . 625 kg (1375 lb)

835 Mower-Conditioner—Weight. . . . . 750 kg (1650 lb)

OUO6085,00005C9-19-13AUG08

Tractor Compatibility

IMPORTANT: Refer to tractor operator's manual for proper ballast.

830 and 835 Mower-Conditioner Tractor Compatibility (1 of 2)						
	Tractor Requirements					
Model No.	Recommended PTO Horsepower	Implement Weight (goes into tractor ballast calculation)	7-Pin Connector Required	Number of SCV Pairs	Hydraulic Minimum Flow /Pressure	PTO Speed
830	52 kW (70 hp.) (minimum)	2400 kg (5291 lb.)	Yes	Two (Three if equipped with hydraulic tilt)	15513 kPa (155 bar) (2250 psi)	540 or 1000 rpm
835	67 kW (90 hp.) (minimum)	2700 kg (5952 lb.)	Yes	Two (Three if equipped with hydraulic tilt)	15513 kPa (155 bar) (2250 psi)	1-3/8 or 1000 rpm

830 and 835 Mower-Conditioner Tractor Compatibility (2 of 2)							
	Tractor Requirements						
Model No.	Road Speed Maximum Limit	Drawbar Vertical Capacity	Drawbar Size	Electrical System Voltage	Electrical System Amps	Electrical System Grounding	Tractor Cab Required
830	32 km/h (20 mph)	625 kg (1375 lb.)	51 x 102 mm (2 x 4 in.) (maximum)	12 VDC	20	Negative	Yes
835	32 km/h (20 mph)	750 kg (1650 lb.)	51 x 102 mm (2 x 4 in.) (maximum)	12 VDC	20	Negative	Yes

PP98408,0000357-19-17NOV09

Serial Numbers

Serial Number Plate

The serial number identifying the mower-conditioner is stamped on factory serial number plate.

These numbers and letters are required when ordering mower-conditioner or attachment replacement parts.

To ensure that you have these numbers at hand, enter the appropriate serial numbers in the spaces provided in each illustration.

CC03745,000030B-19-19DEC01

Record Mower-Conditioner Serial Number

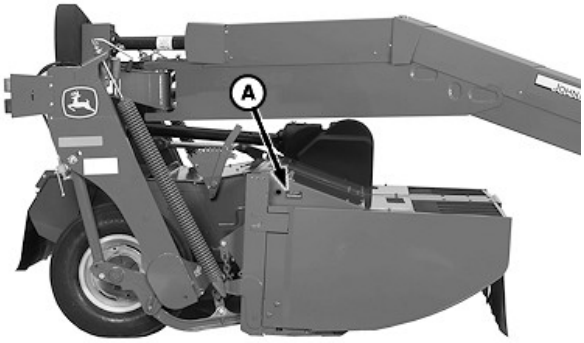

E58200—UN—12NOV09

A—Serial Number Plate

The mower-conditioner serial number plate (A) is located on the right-hand side of the mower-conditioner.

Serial No. _____-____

PP98408,0000358-19-12NOV09

Keep Proof of Ownership

TS1680—UN—09DEC03

1. Maintain in a secure location an up-to-date inventory of all product and component serial numbers.
2. Regularly verify that identification plates have not been removed. Report any evidence of tampering to law enforcement agencies and order duplicate plates.
3. Other steps you can take:
   - Mark your machine with your own numbering system
   - Take color photographs from several angles of each machine

DX,SECURE1-19-18NOV03

Keep Machines Secure

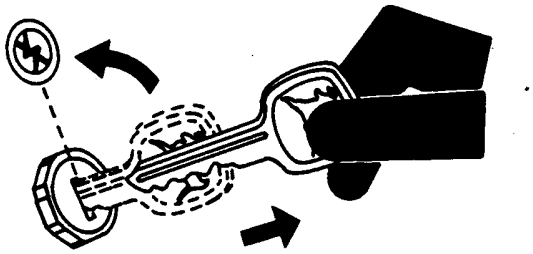

TS230—UN—24MAY89

1. Install vandal-proof devices.
2. When machine is in storage:
   - Lower equipment to the ground
   - Set wheels to widest position to make loading more difficult
   - Remove any keys and batteries
3. When parking indoors, put large equipment in front of exits and lock your storage buildings.
4. When parking outdoors, store in a well-lighted and fenced area.
5. Make note of suspicious activity and report any thefts immediately to law enforcement agencies.
6. Notify your John Deere dealer of any losses.

DX,SECURE2-19-18NOV03

Index

L

M

N

O

P

R

S

T

W

John Deere Service Keeps You On The Job

John Deere Parts

TS100—UN—23AUG88

We help minimize downtime by putting genuine John Deere parts in your hands in a hurry.

That's why we maintain a large and varied inventory—to stay a jump ahead of your needs.

DX,IBC,A-19-04JUN90

The Right Tools

TS101—UN—23AUG88

Precision tools and testing equipment enable our Service Department to locate and correct troubles quickly . . . to save you time and money.

DX,IBC,B-19-04JUN90

Well-Trained Technicians

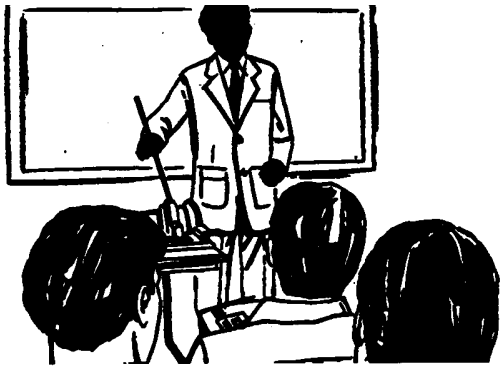

TS102—UN—23AUG88

School is never out for John Deere service technicians.

Training schools are held regularly to be sure our personnel know your equipment and how to maintain it.

Result?

Experience you can count on!

DX,IBC,C-19-04JUN90

Prompt Service

TS103—UN—23AUG88

Our goal is to provide prompt, efficient care when you want it and where you want it.

We can make repairs at your place or at ours, depending on the circumstances: see us, depend on us.

JOHN DEERE SERVICE SUPERIORITY: We'll be around when you need us.

DX,IBC,D-19-04JUN90